Rabbit Pick-Up — General Diagrams Diesel

1982-1983 Index 99
1982-1983 General Diagram 100-105

Rabbit Pick-Up — General Diagrams CIS

1982-1983 Index 106
1982-1983 General Diagram 107-121

Cruise Control

1982-1983 113

Rabbit Pick-Up
1982-1983 Diesel

Description	Current Track
Alternator	2
Alternator charging light	35
Ashtray light	54
Back-up lights	60
Back-up light switch	60
Battery	4
Brake proportioning valve	36
Bulb check relay	41
Cigarette lighter	84
Cigarette lighter light	54
Clock	68
Coolant temperature gauge	29
Coolant temperature sensor	29
Door switch (right)	64
Door switch/buzzer (left)	63
Emergency flasher relay	72
Emergency flasher switch	72
Emergency flasher indicator light	54
Engine temperature sensor	9
Fresh air fan	77
Fresh air fan speed control resistors	76
Fresh air fan switch	77
Fuel gauge	30
Fuel level sensor	30
Fuel shutoff valve	7
Fuse links	2/3
Glove box light	66
Glow plug	8/9
Glow plug relay	8
Headlights	46/47
Headlight switch	50
Headlight dimmer/flasher switch	47
Heater lever light	54
High-beam indicator light	54
Horn	75
Horn button	75
Horn relay	75
Ignition/starter switch	32
Instrument panel lights	54
Interior light	64

Description	Current Track
License plate lights	55
Load reduction relay	33
Oil pressure control unit	38
Oil pressure switch	38/45
Oil pressure warning light	38
Parking brake indicator light	35
Parking brake indicator light switch	35
Parking — side marker lights	48
Radiator fan	14
Radiator fan relay	14
Radiator fan thermal switch	13
Radio	90
Rear window defogger	78
Rear window defogger switch	78
Seat belt relay	43
Seat belt switch	43
Seat belt warning light	40
Side marker lights, rear	50
Starter	5
Stop lights	57/58
Stop light switch	57
Tail light	52/53
Thermal time switch	29
Trunk light	67
Turn signal lights	71/73
Turn signal switch	72
Turn signal indicator light	36
Upshift control unit	87
Upshift idle switch	86
Upshift light	87
Upshift 70% throttle switch	86
Upshift transmission switch	60
Voltage regulator	2
Voltage stabilizer	30
Windshield washer pump	80
Windshield wiper motor	82
Windshield wiper switch	82

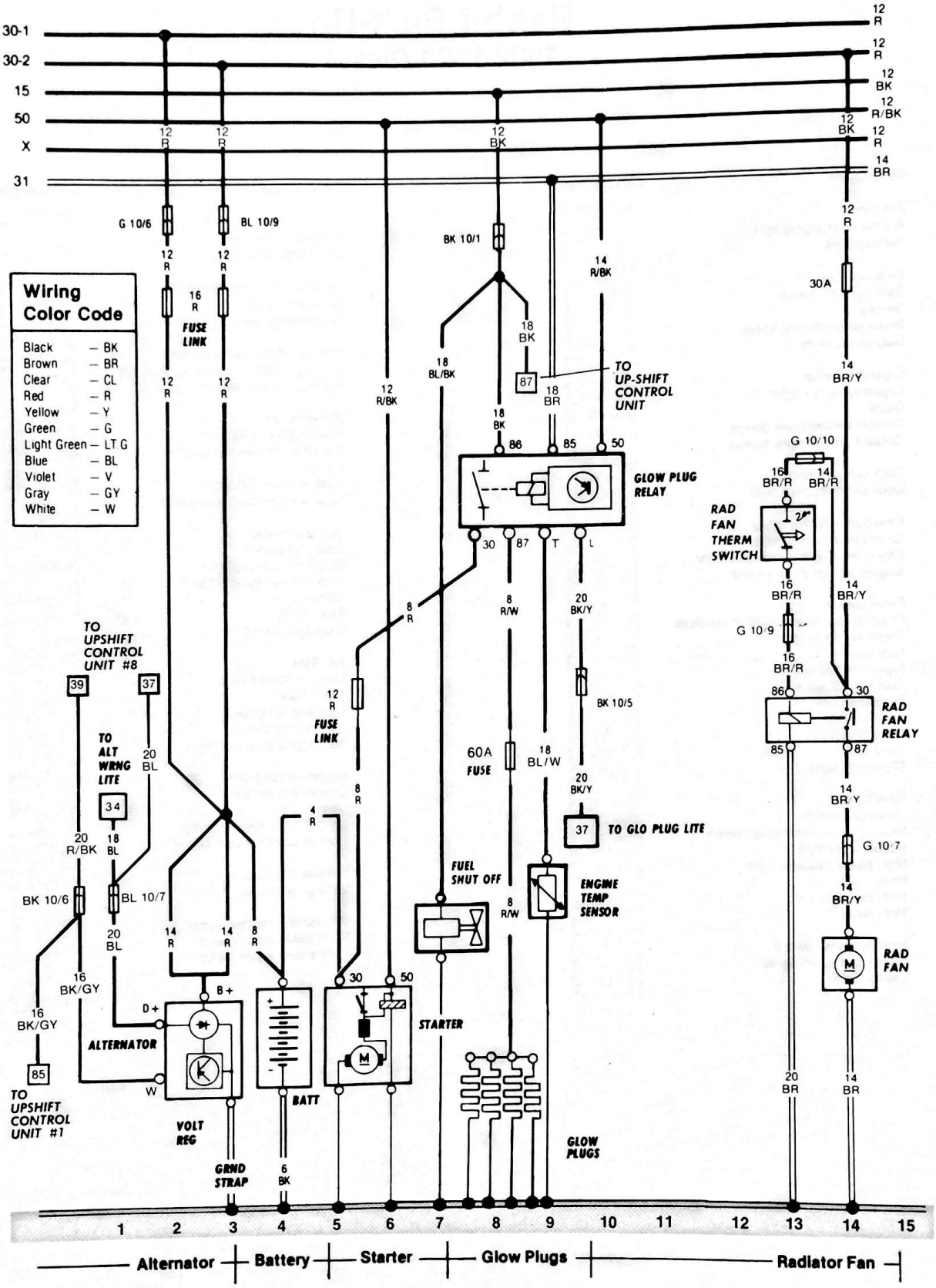

Note: All wire sizes American Wire Gauge

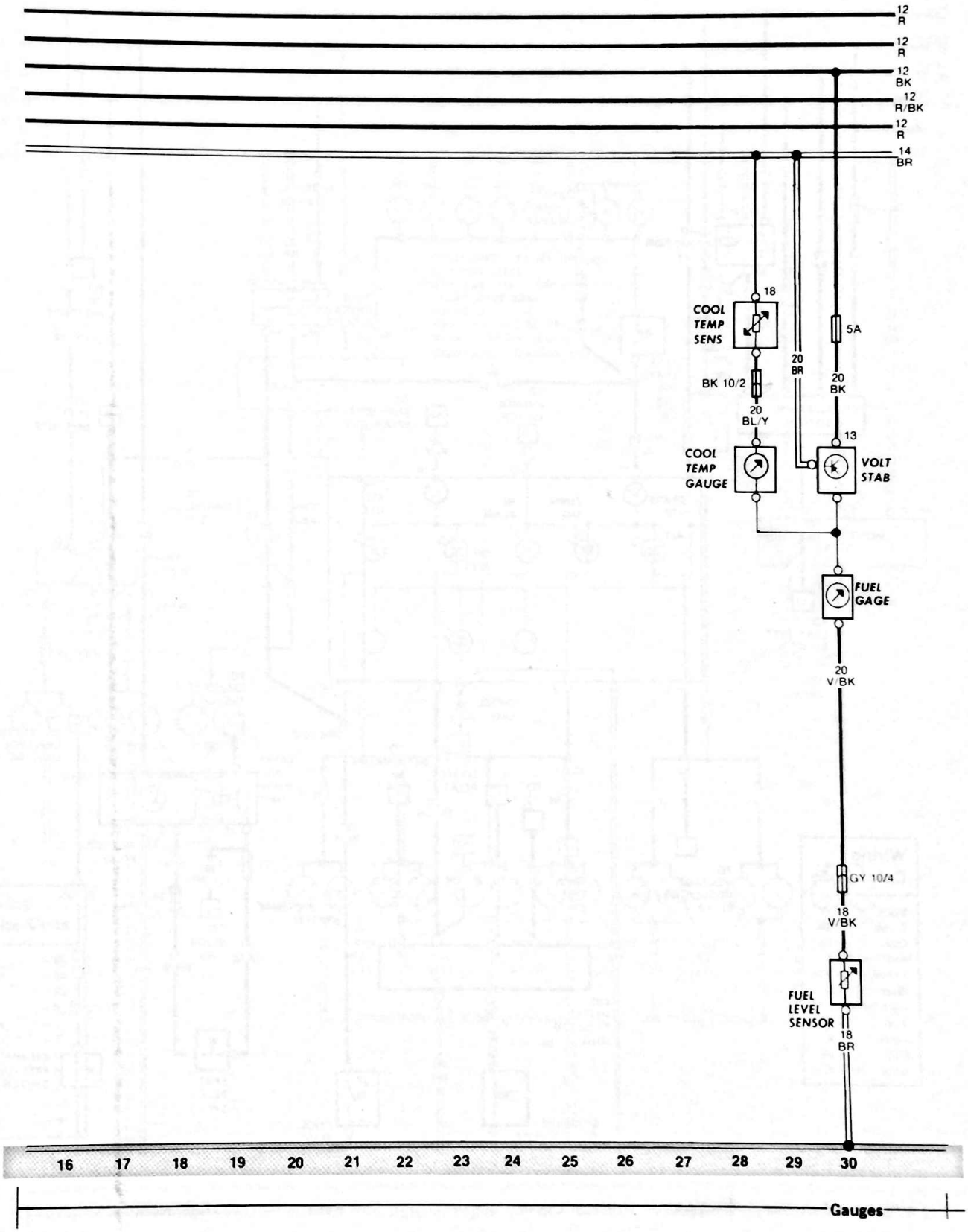
12 R
12 R
12 BK
12 R/BK
12 R
14 BR
18
COOL TEMP SENS
BK 10/2
20 BL/Y
COOL TEMP GAUGE
20 BR
5A
20 BK
13
VOLT STAB
FUEL GAGE
20 V/BK
GY 10/4
18 V/BK
FUEL LEVEL SENSOR
18 BR
16 17 18 19 20 21 22 23 24 25 26 27 28 29 30
Gauges

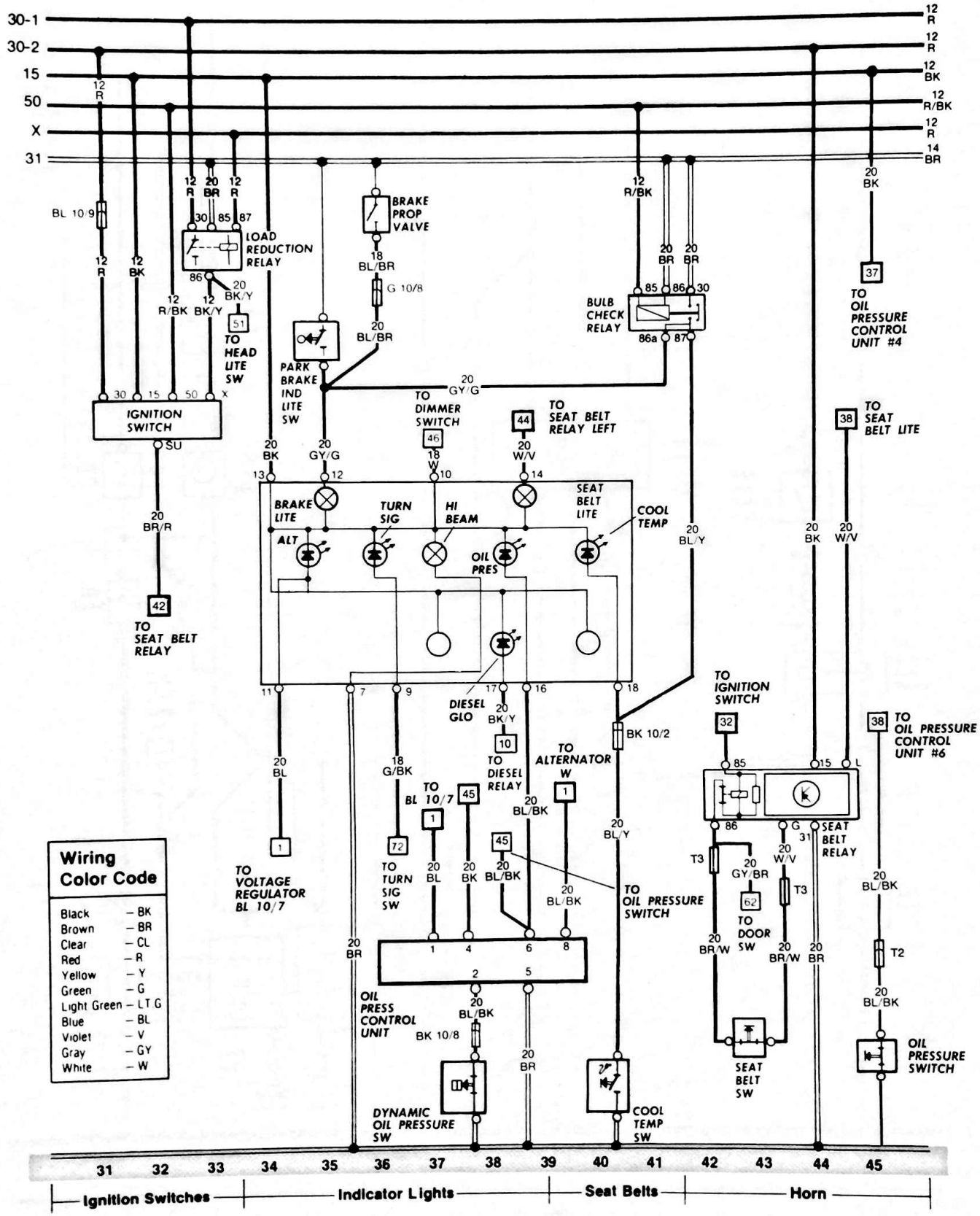

Note: All wire sizes American Wire Gauge

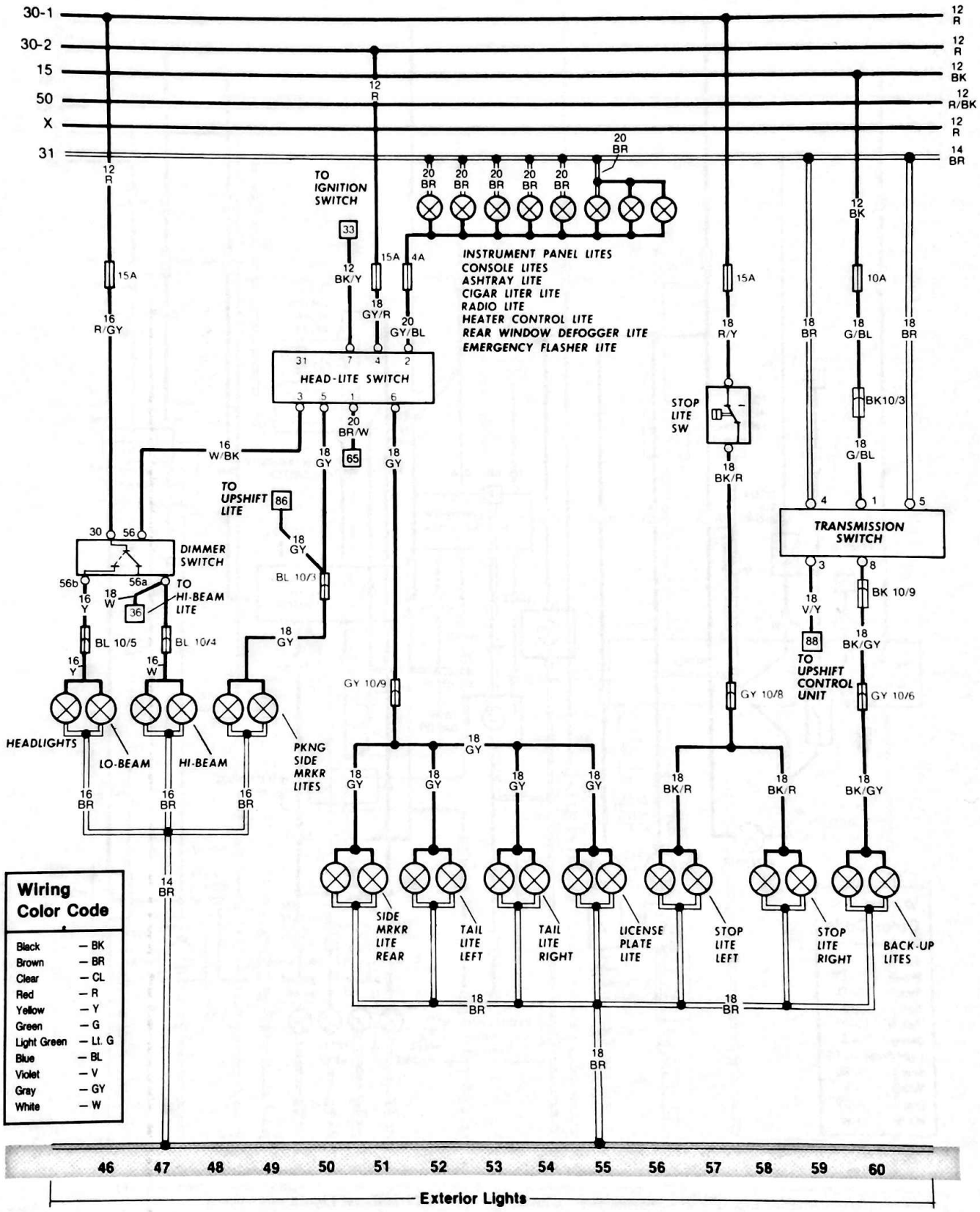

Note; All wire sizes American Wire Gauge

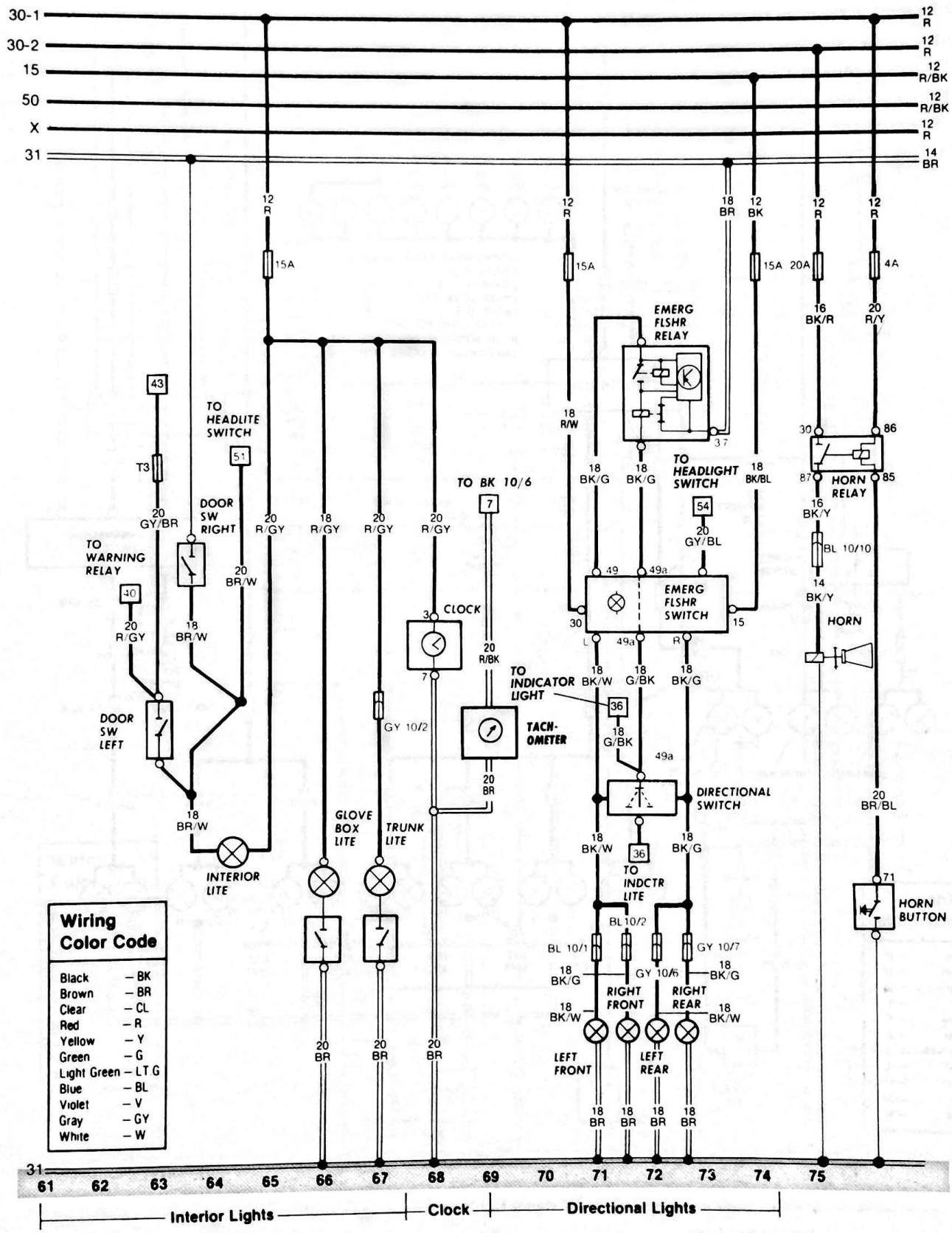

Note: All wire sizes American Wire Gauge

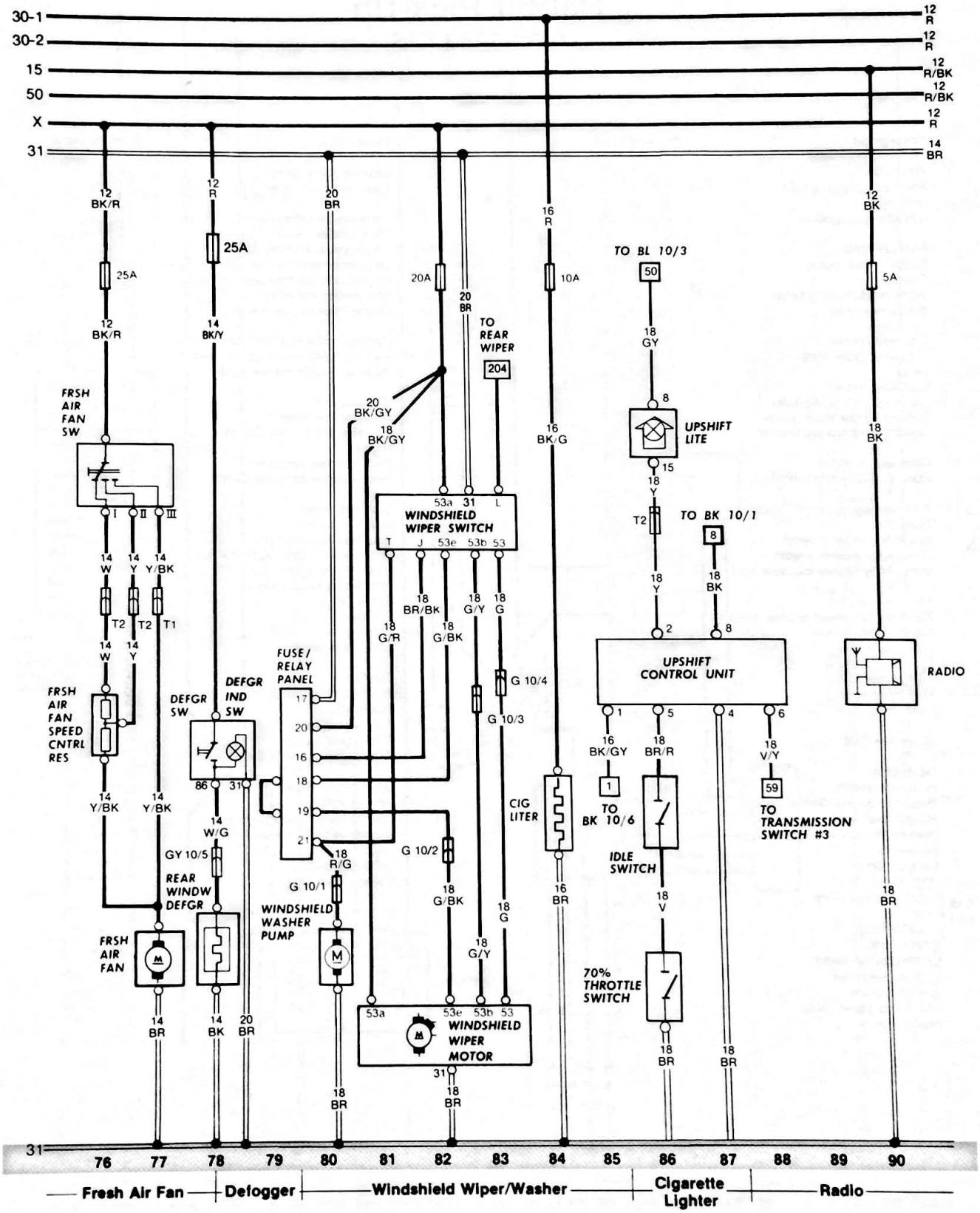

Note: All wire sizes American Wire Gauge

Rabbit Pick-Up
1982-1983 CIS

Description	Current Track
Alternator	2
Alternator charging light	35
Ashtray light	54
Auxiliary air regulator	17
Back-up lights	60
Back-up light switch	60
Battery	4
Brake proportioning valve	36
Bulb check relay	41
Cigarette lighter	84
Cigarette lighter light	54
Clock	68
Cold start valve	29
Control pressure regulator	16
Coolant temperature gauge	26
Coolant temperature sensor	26
Door switch (right)	64
Door switch/buzzer (left)	63
EGR elapsed mileage switch	35
EGR light	35
Emergency flasher relay	72
Emergency flasher switch	72
Emergency flasher indicator light	54
Fresh air fan	77
Fresh air fan speed control resistors	76
Fresh air fan switch	77
Fuel gauge	27
Fuel level sensor	27
Fuel pump	18
Fuel pump relay	19
Fuse links	2/3
Glove box light	66
Headlights	46/47
Headlight switch	50
Headlight dimmer/flasher switch	47
Heater lever light	54
High-beam indicator light	54
Horn	75
Horn button	75
Horn relay	75
Hot start pulse relay	28
Idle stabilizer	12
Ignition coil	8
Ignition/starter switch	32
Ignition distributor	9
Ignition module	11
Instrument panel lights	54
Interior light	64

Description	Current Track
License plate lights	55
Load reduction relay	33
Oil pressure control unit	38
Oil pressure switch	38/45
Oil pressure warning light	38
Oxygen sensor control unit	23
Oxygen sensor frequency valve	22
Oxygen sensor relay	21
Oxygen sensor thermal switch	23
Parking brake indicator light	35
Parking brake indicator light switch	35
Parking — side marker lights	48
Radiator fan	15
Radiator fan relay	14
Radiator fan thermal switch	14
Radio	90
Rear window defogger	78
Rear window defogger switch	78
Seat belt relay	43
Seat belt switch	43
Seat belt warning light	40
Shift console light (auto. trans.)	54
Side marker lights, rear	50
Spark plug suppressors	9
Spark plugs	9
Starter	5
Stop lights	57/58
Stop light switch	57
Tail light	52/53
Thermal time switch	29
Trunk light	67
Turn signal lights	71/73
Turn signal switch	72
Turn signal indicator light	36
Upshift control unit	87
Upshift light	87
Upshift transmission switch	60
Upshift vacuum switch	86
Voltage regulator	2
Voltage stabilizer	27
Windshield washer pump	80
Windshield wiper motor	82
Windshield wiper switch	82

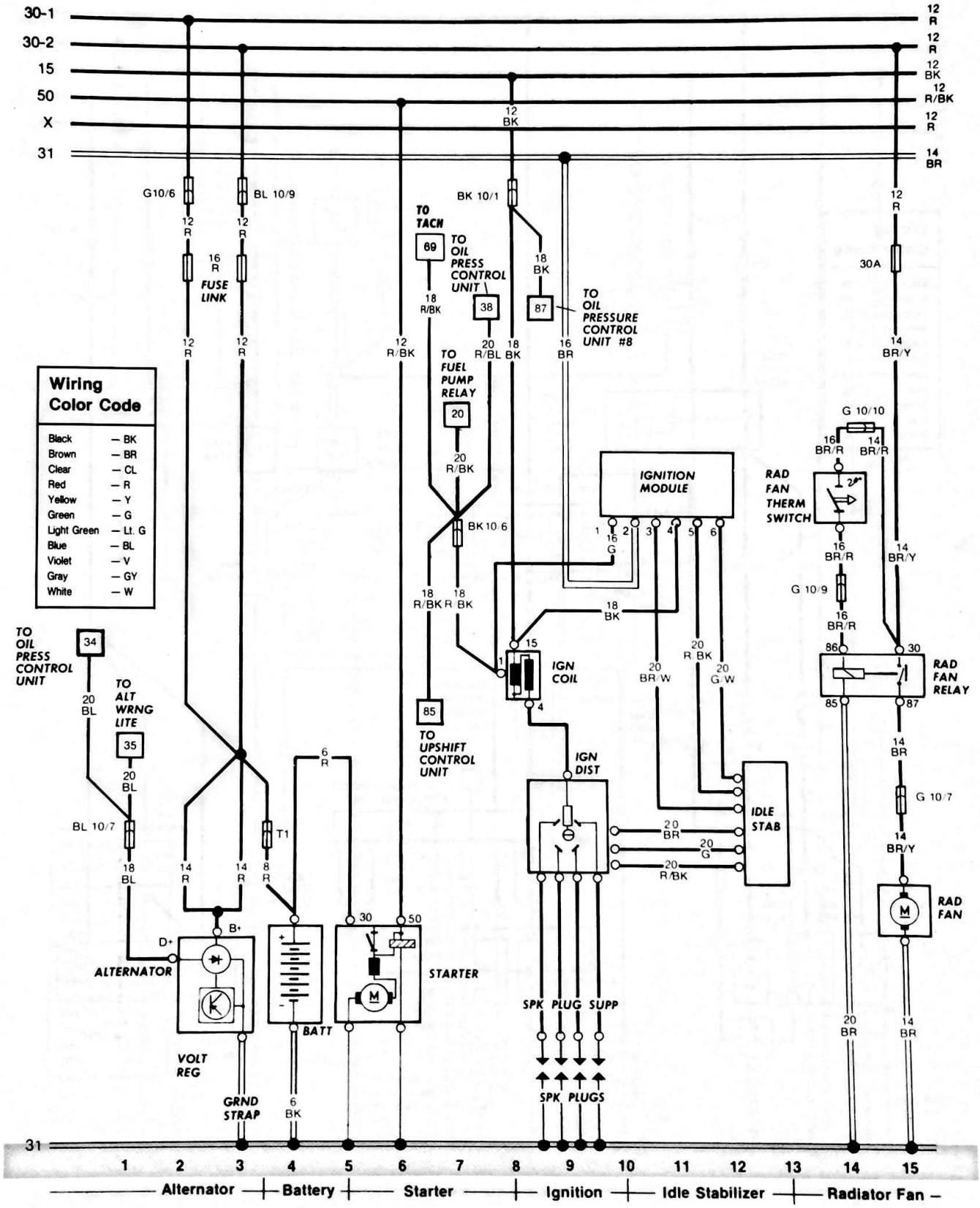

All wire sizes American Wire Gauge

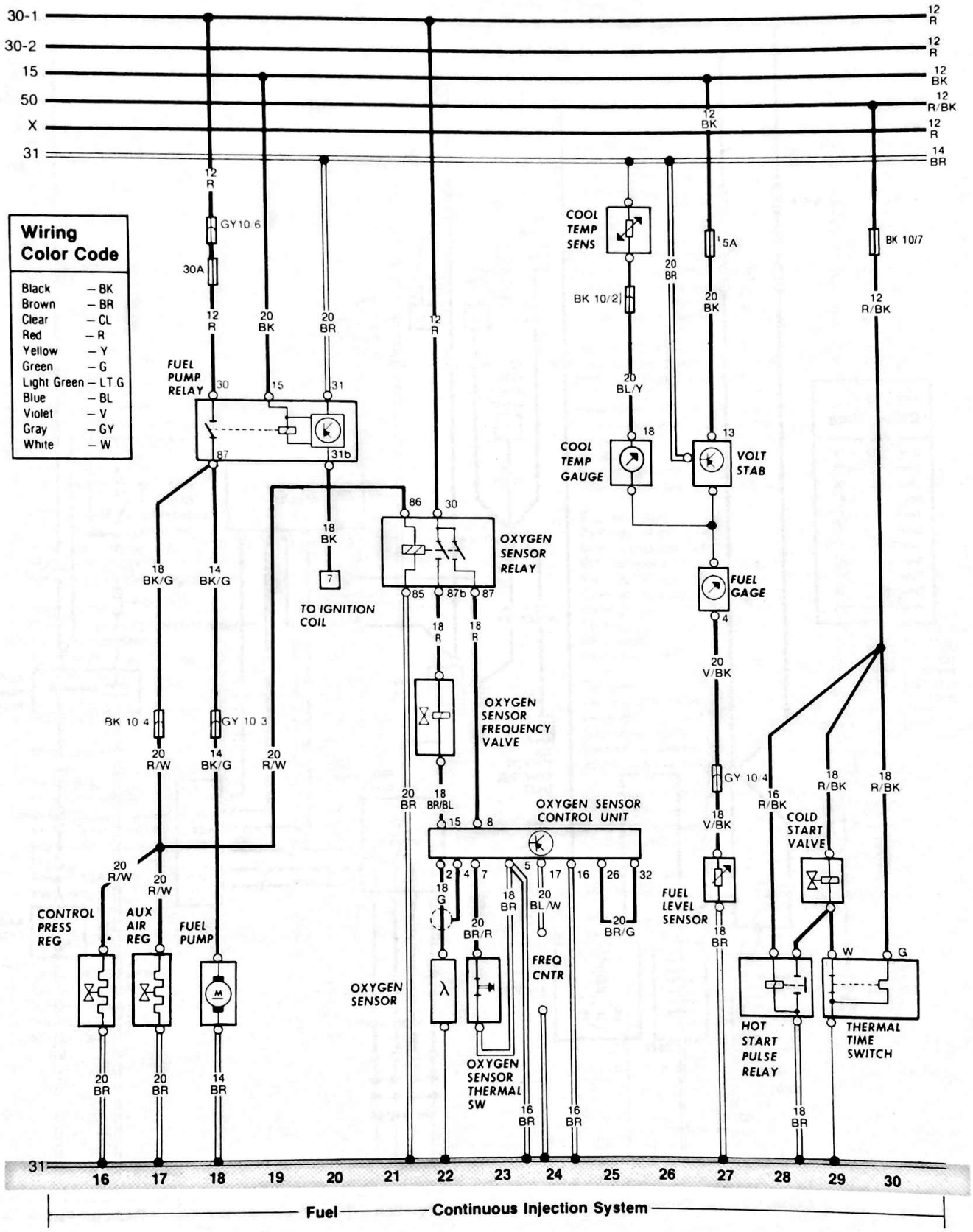

All wire sizes American Wire Gauge

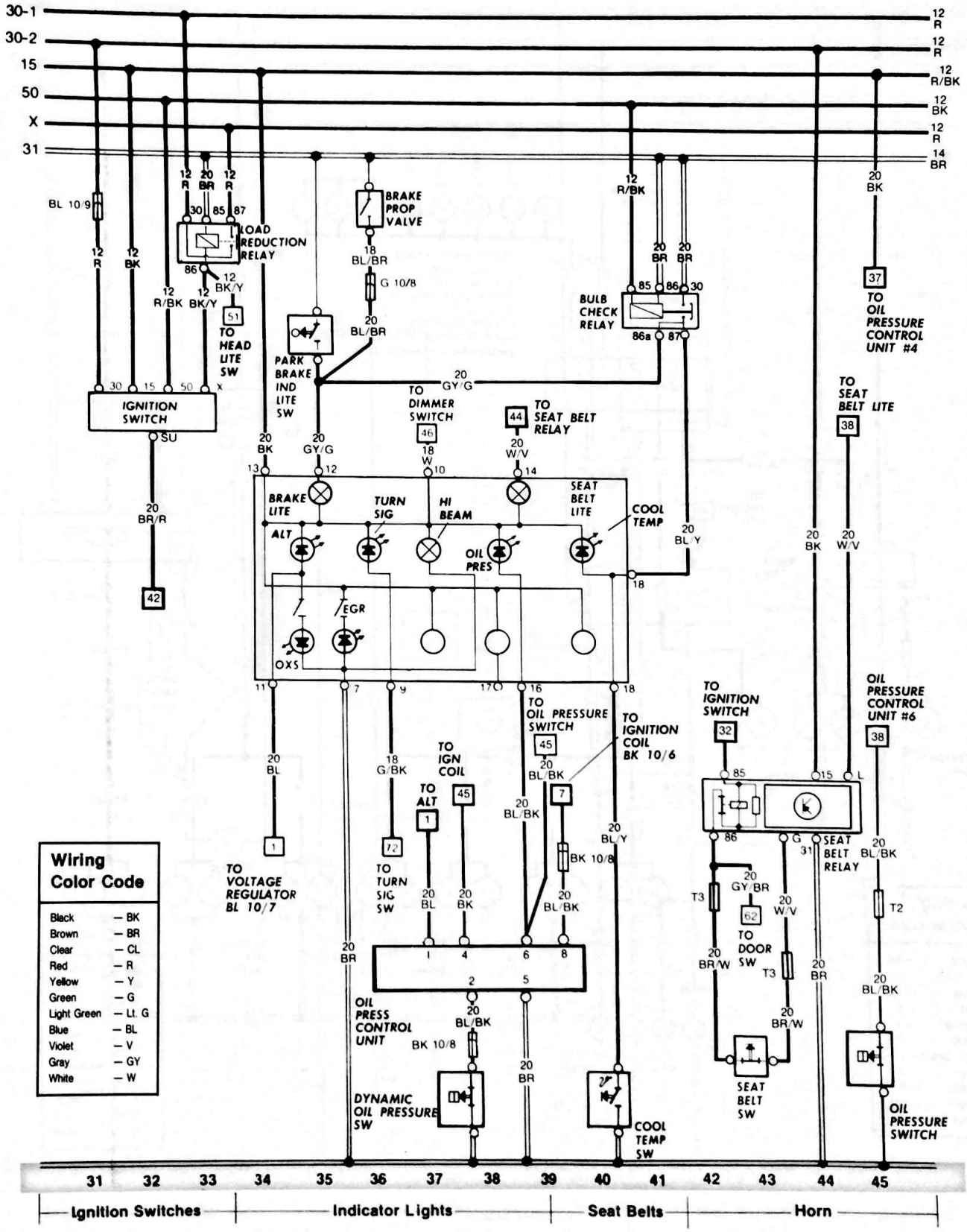

Wiring Color Code

Black	— BK
Brown	— BR
Clear	— CL
Red	— R
Yellow	— Y
Green	— G
Light Green	— Lt. G
Blue	— BL
Violet	— V
Gray	— GY
White	— W

All wire sizes American Wire Gauge

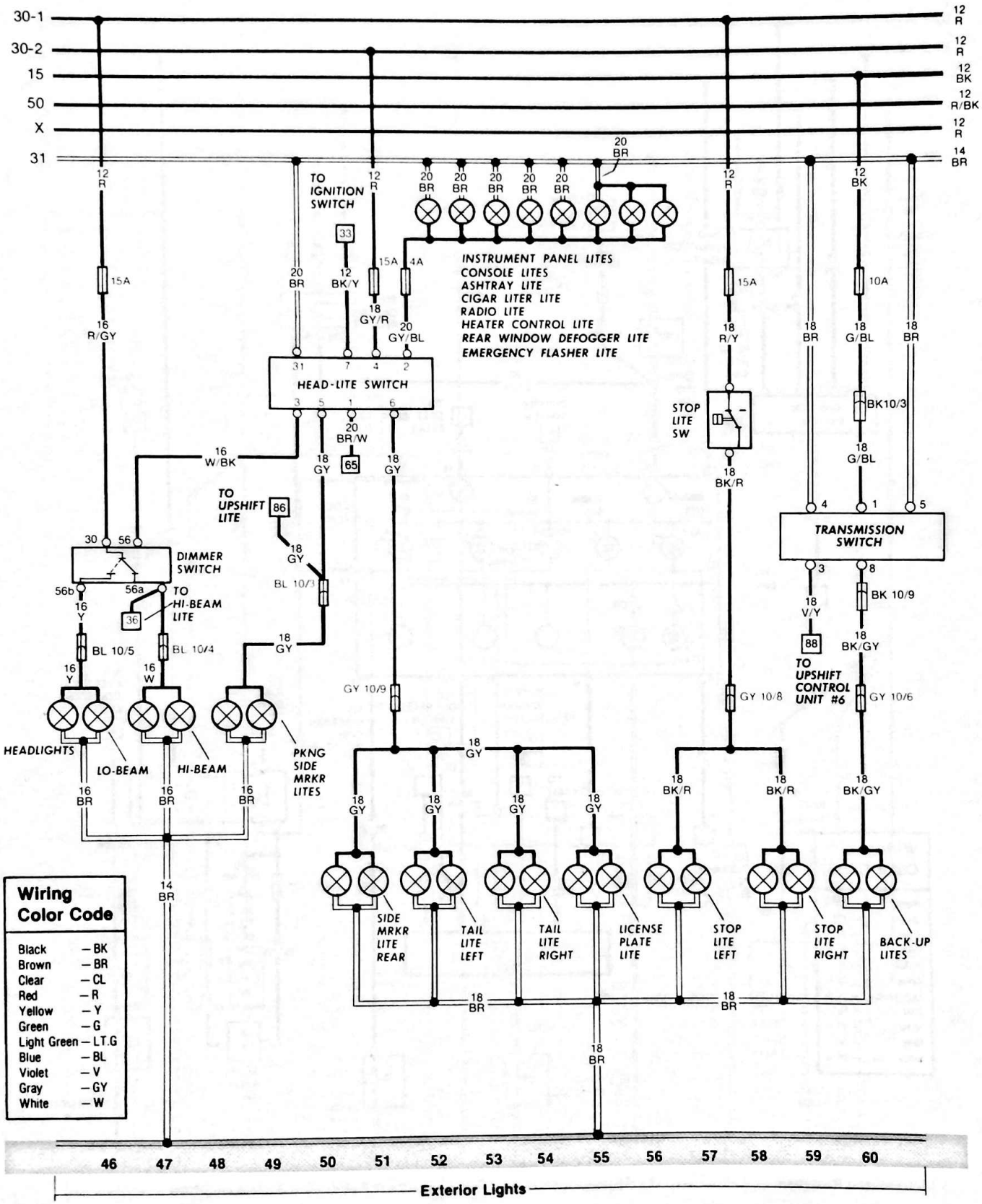

Wiring Color Code

Black	– BK
Brown	– BR
Clear	– CL
Red	– R
Yellow	– Y
Green	– G
Light Green	– LT.G
Blue	– BL
Violet	– V
Gray	– GY
White	– W

All wire sizes American Wire Gauge

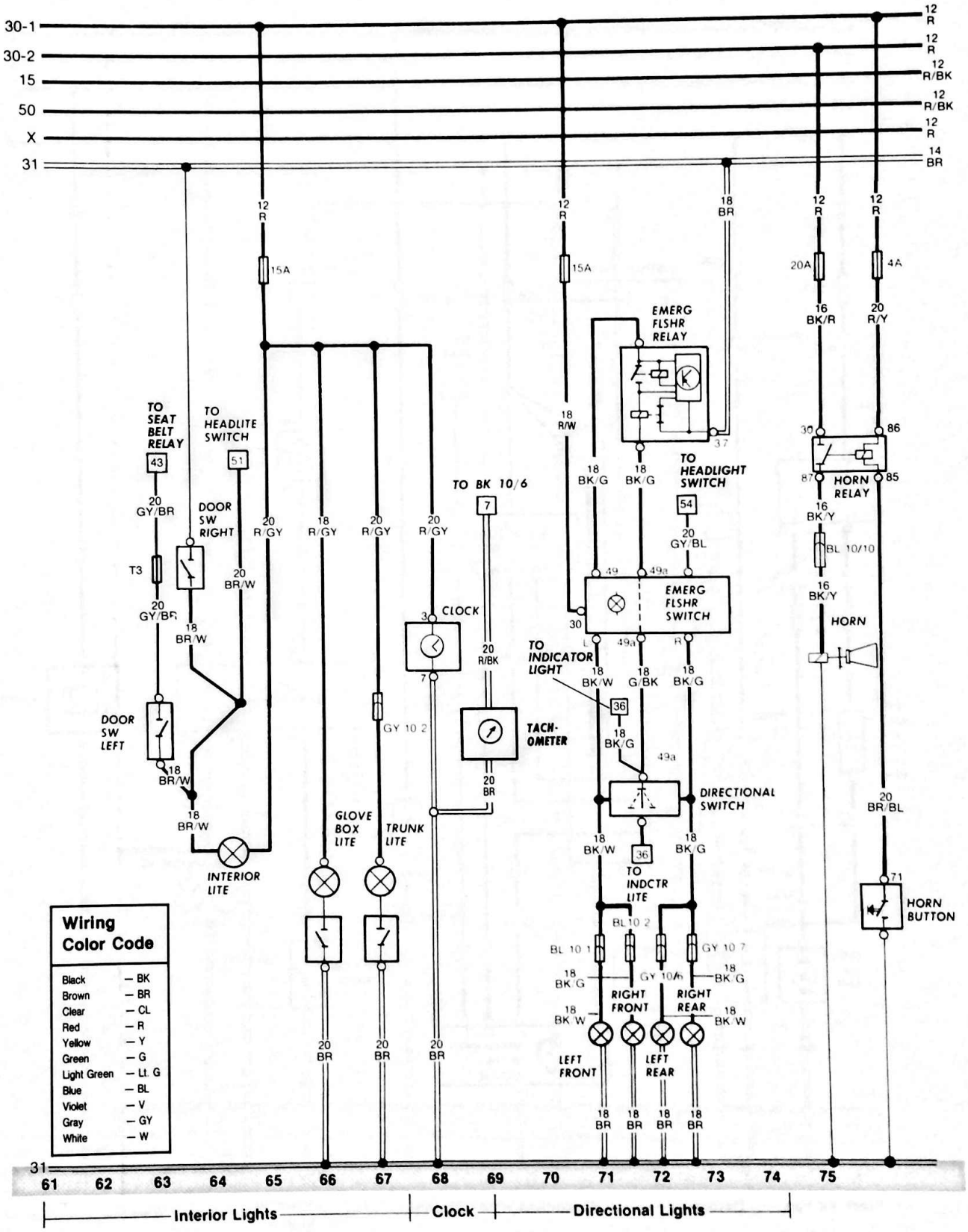

All wire sizes American Wire Gauge

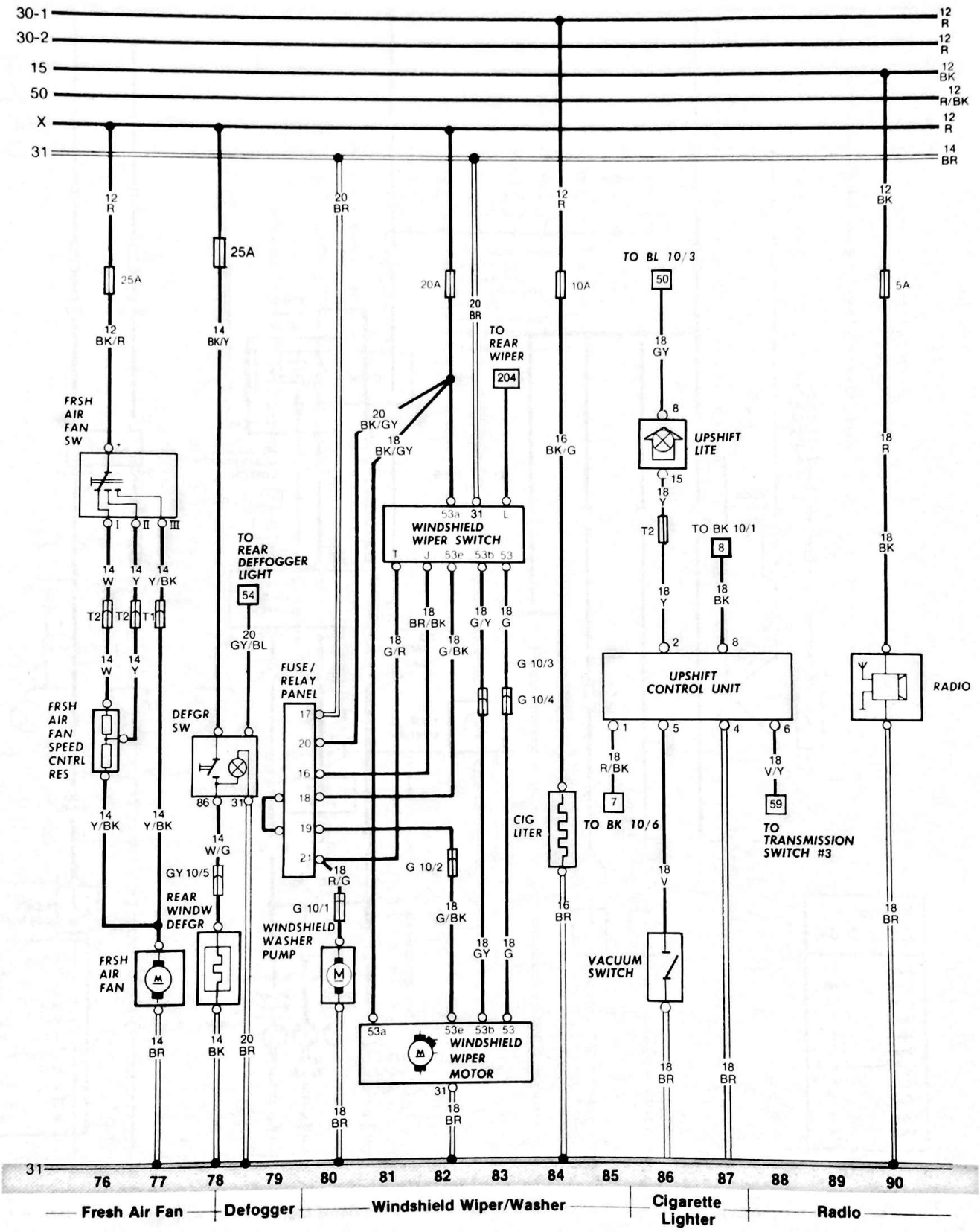

All wire sizes American Wire Gauge

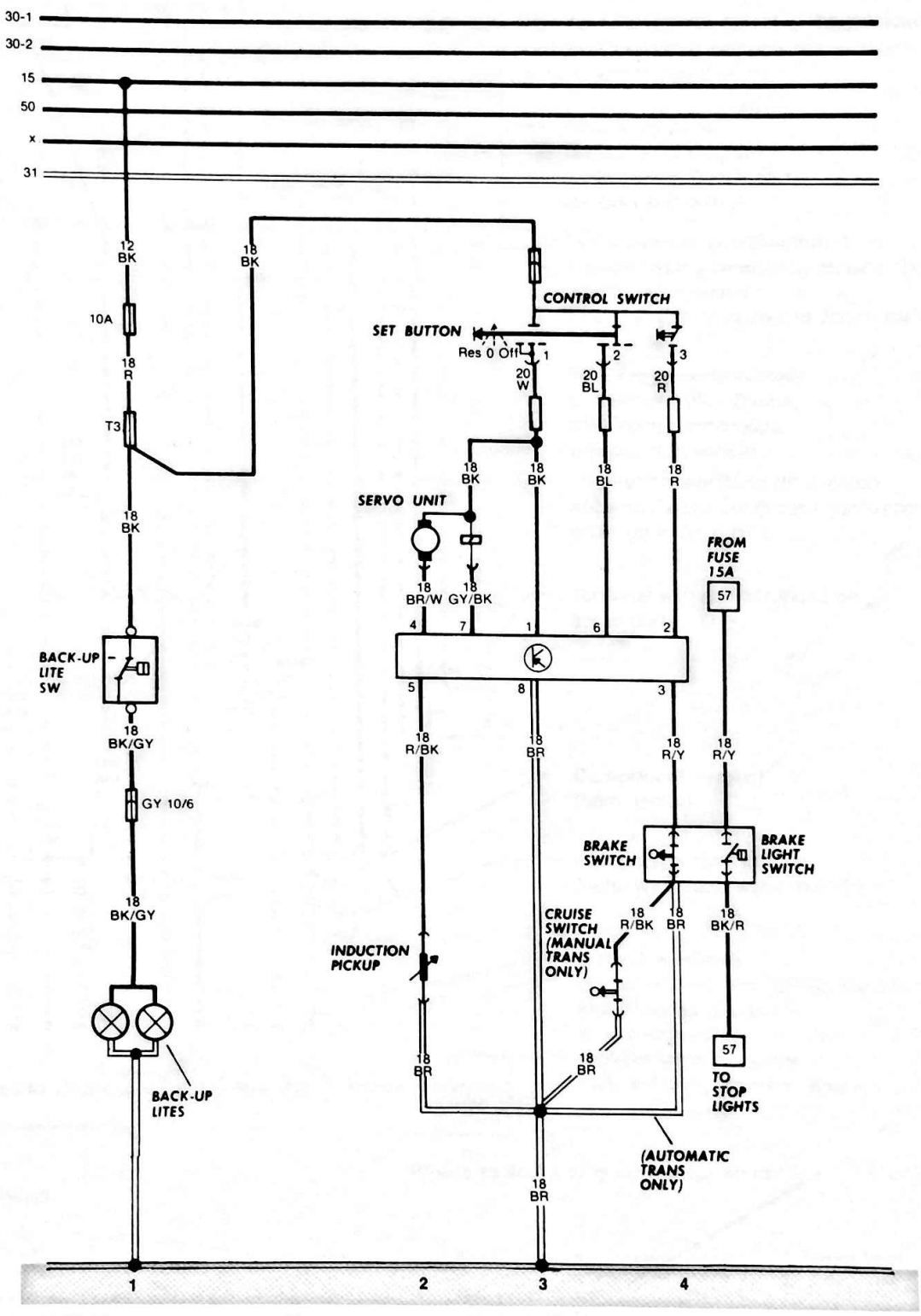
30-1
30-2
15
50
x
31
12 BK
18 BK
10A
18 R
T3
18 BK
BACK-UP LITE SW
18 BK/GY
GY 10/6
18 BK/GY
BACK-UP LITES
CONTROL SWITCH
SET BUTTON
Res 0 Off
1
2
3
20 W
20 BL
20 R
18 BK
18 BK
18 BL
18 R
SERVO UNIT
18 BR/W
18 GY/BK
FROM FUSE 15A
57
4
7
1
6
2
5
8
3
18 R/BK
18 BR
18 R/Y
18 R/Y
BRAKE SWITCH
BRAKE LIGHT SWITCH
CRUISE SWITCH (MANUAL TRANS ONLY)
18 R/BK
18 BR
18 BK/R
INDUCTION PICKUP
18 BR
18 BR
57
TO STOP LIGHTS
(AUTOMATIC TRANS ONLY)
18 BR
1
2
3
4

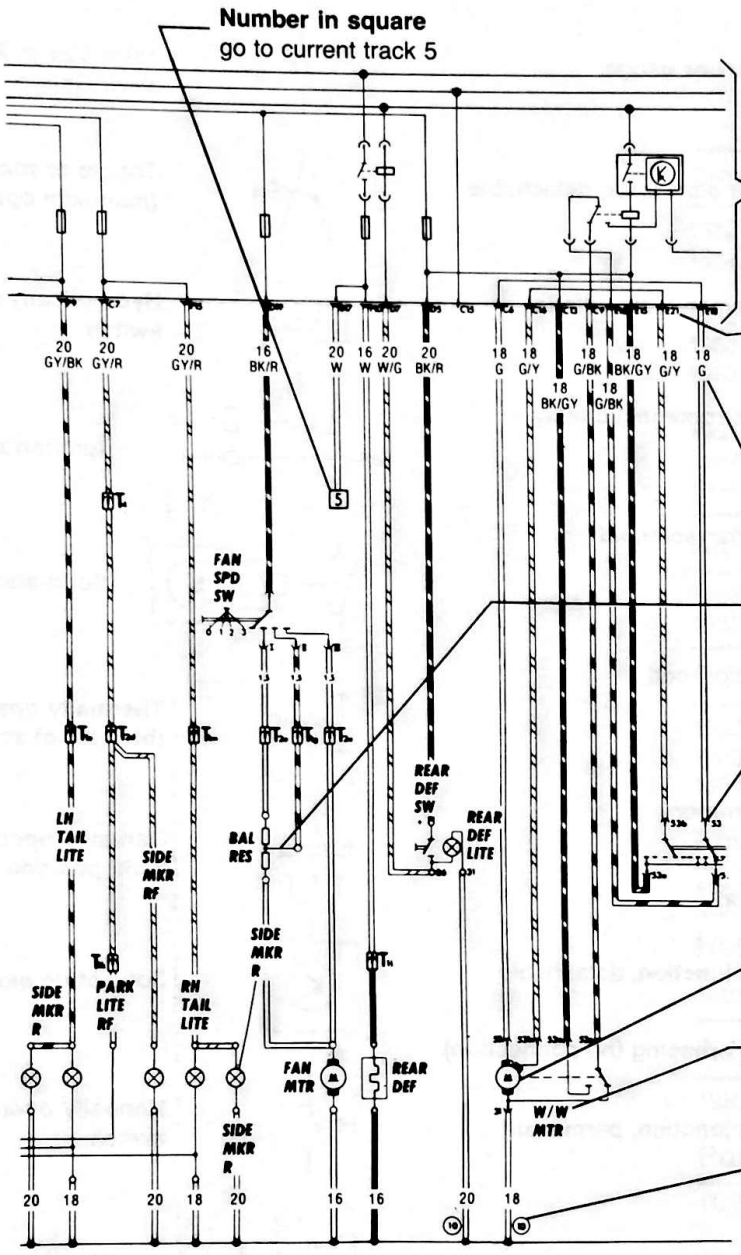

Number in square
go to current track 5

Note
All switches and contacts are in mechanically neutral position. The various contacts are shown in current tracks in which they operate.

Fuse/relay panel
across top of diagram
contains individual fuse(s)
symbols and ratings

Letter/number combination
identifies wiring connection on fuse/relay board to component
Example: **E18** = multipoint connector **E**, terminal **18**

Wire cross section/color
in **A**merican **W**ire **G**auge,
color code corresponds
with colors in vehicle

Internal connections (thin lines)
not actual wires but ground connections
which go through parts

Terminal with number found on
actual part

Component symbol
(here: motor)

Component designation
(here: windshield wiper motor)

Circled numbers
ground connections, numbers appear in legend telling you where
to find connector

Current track numbers
help find components in diagram

Parking / Side mkr. / Tail lights | **Fan** | **Rear def.** | **Wipers / Washers**

Note: All wire sizes American Wire Gauge

97-539

Where to find a wire connector on car

Sample Legend

Description	Current Track
Parking light, right front	79
Rear window defogger element	85
Rear window defogger indicator light	87
Rear window defogger relay	85
Rear window defogger switch	86
Sidemarker, right front	80
Sidemarker, rear	77, 82
Tail light, right	81
Windshield wiper intermittent switch	68
Windshield wiper motor	88, 89

Wire Connectors		Current Track
T2d	— behind dash	79
T2e	— behind dash	83, 84
10	— Ground connector, instrum. clstr.	87, 88
11	— Ground connector, body	

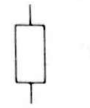
Resistor

Variable resistor

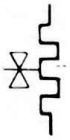
Electrically operated valve

Condenser (capacitor)

Spark plug

Fuse

Light bulb

One filament in a multifilament light bulb

Heating element

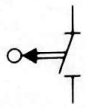
Mechanically operated switch

Light-emitting diode (LED)

Meter or gauge

Wire connector, detachable

Semiconductor diode

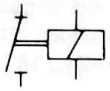
Electromagnetic relay

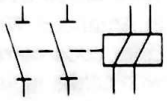
Starter solenoid

Ignition coil

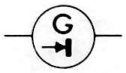

Alternator

Motor

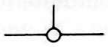
Wire junction, detachable

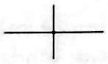
Wire crossing (no connection)

Wire junction, permanent

Battery

Shield conductors

Soldered or welded wire splice

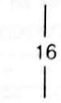

Wire size in American Wire Gauge

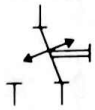
Toggle or rocker switch (manually operated)

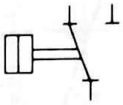
Hydraulically operated switch

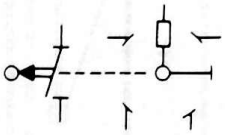
Ignition distributor

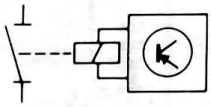
Solid-state relay

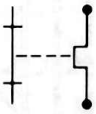
Thermally operated (bimetallic) switch

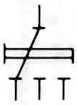
Manually operated multi-position switch

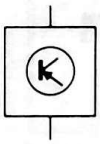
Solid-state circuitry

Manually operated switch

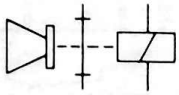
Horn

Terminal Number Code

30 = power from battery, always "hot"
15 = power when ignition is ON
50 = power only when cranking
X = power when key is ON (looses power when cranking)
31 = ground

Color Code

Black	— BK	Green	— G
Brown	— BR	Light Green	— LT. G
Clear	— CL	Blue	— BL
Red	— R	Violet	— V
Yellow	— Y	Gray	— GY
		White	— W

Wire Connector Code

T1	— single
T2	— double
T3	— 3-point
T10	— 10-point
T18	— 18-point

Scirocco — General Diagrams

1982 Index 117
1982 General Diagram 118-123

1983 Fuse/Relay Panel 129-130
1983 Index 131
1983 General Diagram 132-138

1984 Fuse/Relay Panel 145
1984 Index 131
1984 General Diagram 147-155

Air Conditioning

1982 125-126
1983-1984 139-140

Oil Pressure Warning System

1982 137
1983 133
1984 149

Power Door Locks

1983-1984 141

Heated Driver Seat

1983 142

Adjustable, Heated, Outside Mirrors

1983-1984 143

Power Windows

1983-1984 144

Description	Current Track
Alternator	3, 4
Alternator warning light	54
Ashtray light	108
Auxiliary air regulator	24
Back-up light, left	127
Back-up light, right	129
Back-up light switch	128
Battery	5
Brake light, left	92
Brake light, right	91
Brake light switch	90, 91
Brake warning light switch	42
Brake warning and parking brake warning light, dual circuit	41
Cigarette lighter	74
Cigarette lighter light	73
Clock, digital	71
Clock light	70
Cold start valve	27, 28
Cold start valve relay	29
Control pressure regulator	23
Coolant over-temperature warning light	58
Coolant temperature gauge	57
Coolant temperature gauge sending unit	63
Door contact switch, front left and contact for buzzer	33, 34
Door contact switch, front right	32
Emergency flasher (hazard) switch	103-109
Emergency flasher relay	104-105
Emergency flasher warning light	109
Fresh air control lever light	107
Fresh air fan	95
Fresh air fan resistor	93
Fresh air fan switch	93-95
Fuel gauge	56
Fuel gauge sending unit	26
Fuel pump	25
Fuel pump relay	17-19
Fuse, CIS	19
Fuses, S1-S15 on fuse/relay panel	
Hall generator	9, 10
Headlight dimmer and flasher switch	83, 84
Headlight high-beam, left	90
Headlight high-beam, right	89
Headight high-beam warning light	53
Headlight low-beam, left	85, 87
Headight low-beam, right	86, 88
Horn button	133
Horn, dual	130, 131
Horn relay, dual	132, 133
Idle stabilizer	9, 10
Ignition coil	12, 13
Ignition control unit, transistorized	8-12
Ignition distributor	11-14
Ignition/starter switch	33-37
Instrument panel light	68, 69
Instrument panenl lighting control switch	73
Interior light, front	31, 32
License plate light	75-76
Light switch	66-73
Light switch warning light	99
Load reduction relay (X-contact)	65, 66
Luggage compartment light	30
Luggage compartment light switch rear	30

Description	Current Track
Oil pressure control unit	48, 52
Oil pressure switch	64
Oil pressure warning light	51
Oil temperature gauge	97, 98
Oil temperature gauge light	106
Oil temperature sender	96
*OXS control unit (USA & Calif. only)	15-21
*OXS elapsed mileage switch (USA & Calif. only)	81, 82
*OXS frequency valve (USA & Calif. only)	20
*OXS (oxygen sensor) (USA & Calif. only)	16
*OXS thermoswitch (USA & Calif. only)	17
*OXS voltage supply relay (USA & Calif. only)	19-22
*OXS warning light (USA & Calif. only)	60
Parking brake warning light switch	41
Parking light, left	82
Parking light, right	77
Radiator fan	2
Radiator fan thermoswitch	2
Radio	104
Rear window defogger heating element	100
Rear window defogger switch	101, 102
Rear window defogger switch light	102
Rear window defogger warning light	101
Rear window washer pump	122
Rear window wiper motor	124, 125
Rear window wiper/washer relay	123, 124
Safety belt switch, left	36
Safety belt warning system light	40
Safety belt warning system relay	34-38
Series resistance	20
Side-marker light, rear	79
Spark plug connectors	11-14
Spark plugs	11-14
Starter	6, 7
Tachometer	48
Tail light, left	80
Tail light, right	78
Thermo-time switch	27-28
Turn signal light, front left	110
Turn signal light, front right	112
Turn signal light, rear left	111
Turn signal light, rear right	113
Turn signal switch	105, 106
Turn signal warning light	55
Up-shift indicator control unit	43, 44
Up-shift indicator light	47
Up-shift indicator selector switch	45
Up-shift indicator vacuum switch	43
Voltage regulator	3, 4
Voltage stabilizer	56
Windshield washer pump	126
Windshield wiper motor	115-117
Windshield wiper switch	118-121
Windshield wiper/washer intermittent relay	116-118

Wire Connectors

T — single, behind dash
T1a — single, in engine compartment near brake master cylinder
T1c — single, in engine compartment front, left
T1d — single, behind dash
T1g — single, near fuse/relay panel
T1h — single, near relay panel
T1j — single, behind dash
T1k — single, near fuse/relay panel
T1p — single, behind dash
T1s — single, behind dash
T1t — single, near fuse/relay panel
T1v — single, in engine compartment attached to fuel line

Wire Connectors

T3a — three point, behind dash
T3b — three point, behind dash
T4 — four point, behind dash
T4a — four point, in engine compartment, left
T4r — four point, behind dash
T6/ — six point, on instrument cluster
T8/ — eight point, on transmission**
T14/ — fourteen point, on instrument cluster

Wire Connectors

T2a — double, in engine compartment near dual horn
T2b — double, behind dash
T2c — double, in engine compartment, left
T2d — double, behind dash
T2e — double, in luggage compartment, left
T2f — double, behind dash
T2g — double, in luggage compartment, left
T2h — double, near fuse/relay panel
T2l — double, near fuse/relay panel
T2m — double, in engine compartment (near brake master cylinder)
T2p — double, in engine compartment (near brake master cylinder)

**4-speed manual transmission — contact T8/3 in use
5-speed manual transmission — contact T8/5 in use

Ground Connectors

(1) — from battery via body to transmission
(2) — from alternator to engine
(8) — on cold start valve
(10) — near fuse/relay panel
(13) — in luggage compartment (wheel housing right)
(15) — in isolating hose of wiring harness, front
(16) — bound with isolating tape in dash wiring harness
(17) — in rear lid
(19) — on C pillar top right

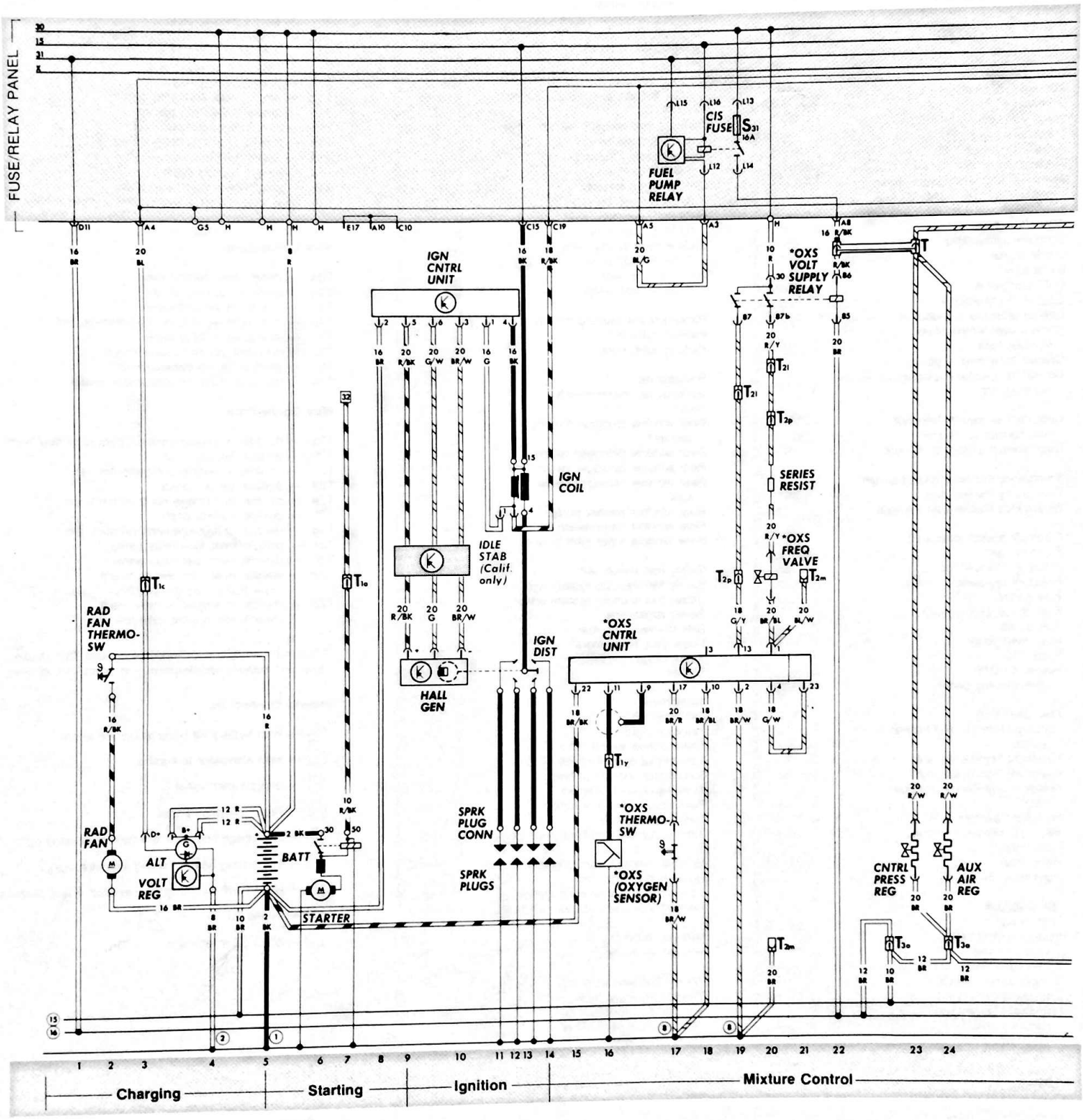
FUSE/RELAY PANEL
30
15
31
X
FUEL PUMP RELAY
CIS FUSE
S31
16A
IGN CNTRL UNIT
IGN COIL
IDLE STAB (Calif. only)
HALL GEN
IGN DIST
SPRK PLUG CONN
SPRK PLUGS
*OXS VOLT SUPPLY RELAY
SERIES RESIST
*OXS FREQ VALVE
*OXS CNTRL UNIT
*OXS THERMO-SW
*OXS (OXYGEN SENSOR)
RAD FAN THERMO-SW
RAD FAN
ALT
VOLT REG
BATT
STARTER
CNTRL PRESS REG
AUX AIR REG
Charging
Starting
Ignition
Mixture Control

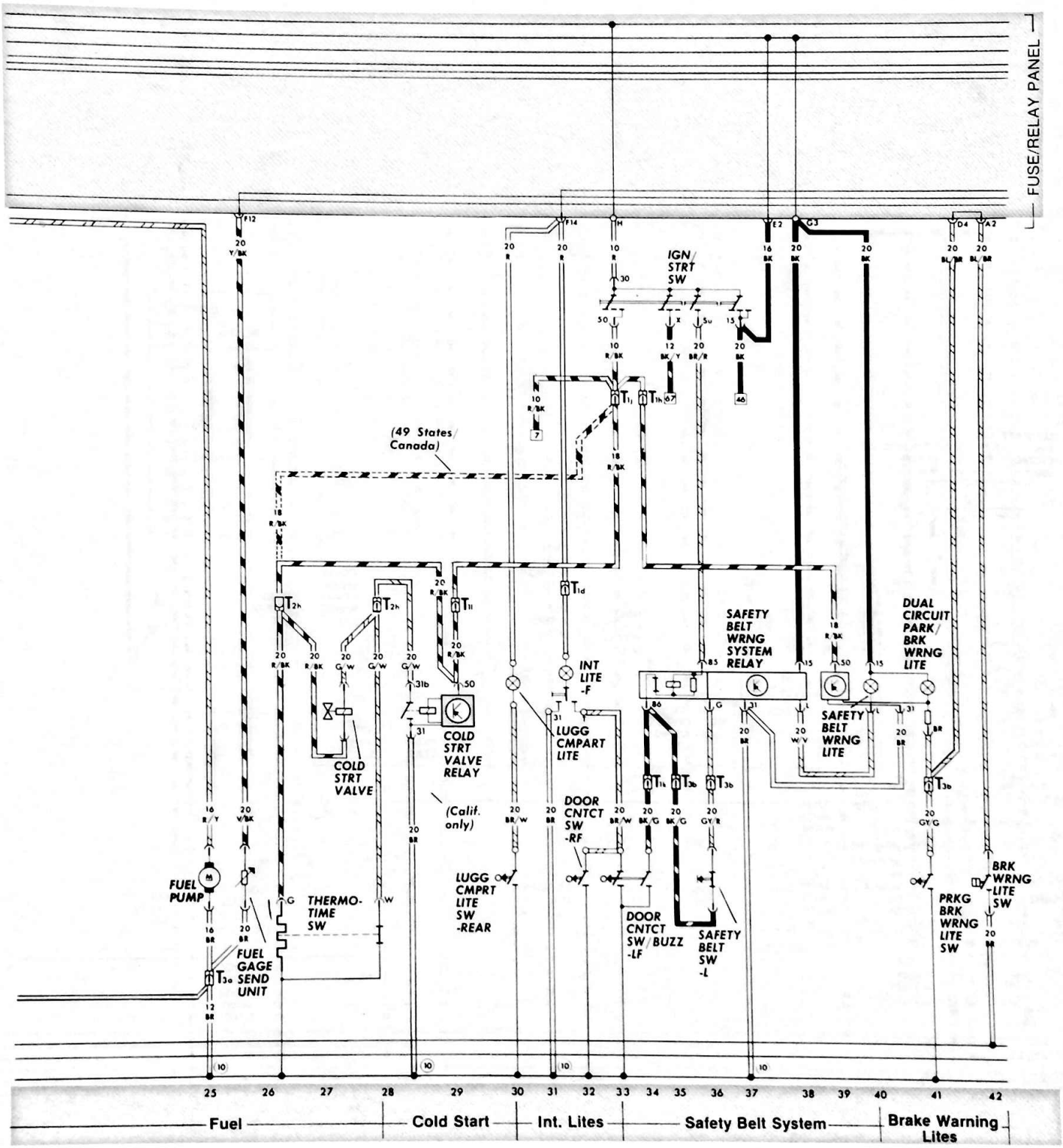
FUSE/RELAY PANEL
IGN/ STRT SW
(49 States/ Canada)
COLD STRT VALVE
COLD STRT VALVE RELAY
(Calif. only)
INT LITE -F
LUGG CMPART LITE
SAFETY BELT WRNG SYSTEM RELAY
DUAL CIRCUIT PARK/ BRK WRNG LITE
SAFETY BELT WRNG LITE
DOOR CNTCT SW -RF
LUGG CMPRT LITE SW -REAR
DOOR CNTCT SW/BUZZ -LF
SAFETY BELT SW -L
PRKG BRK WRNG LITE SW
BRK WRNG -LITE SW
FUEL PUMP
THERMO-TIME SW
FUEL GAGE SEND UNIT
25 26 27 28 29 30 31 32 33 34 35 36 37 38 39 40 41 42
Fuel
Cold Start
Int. Lites
Safety Belt System
Brake Warning Lites

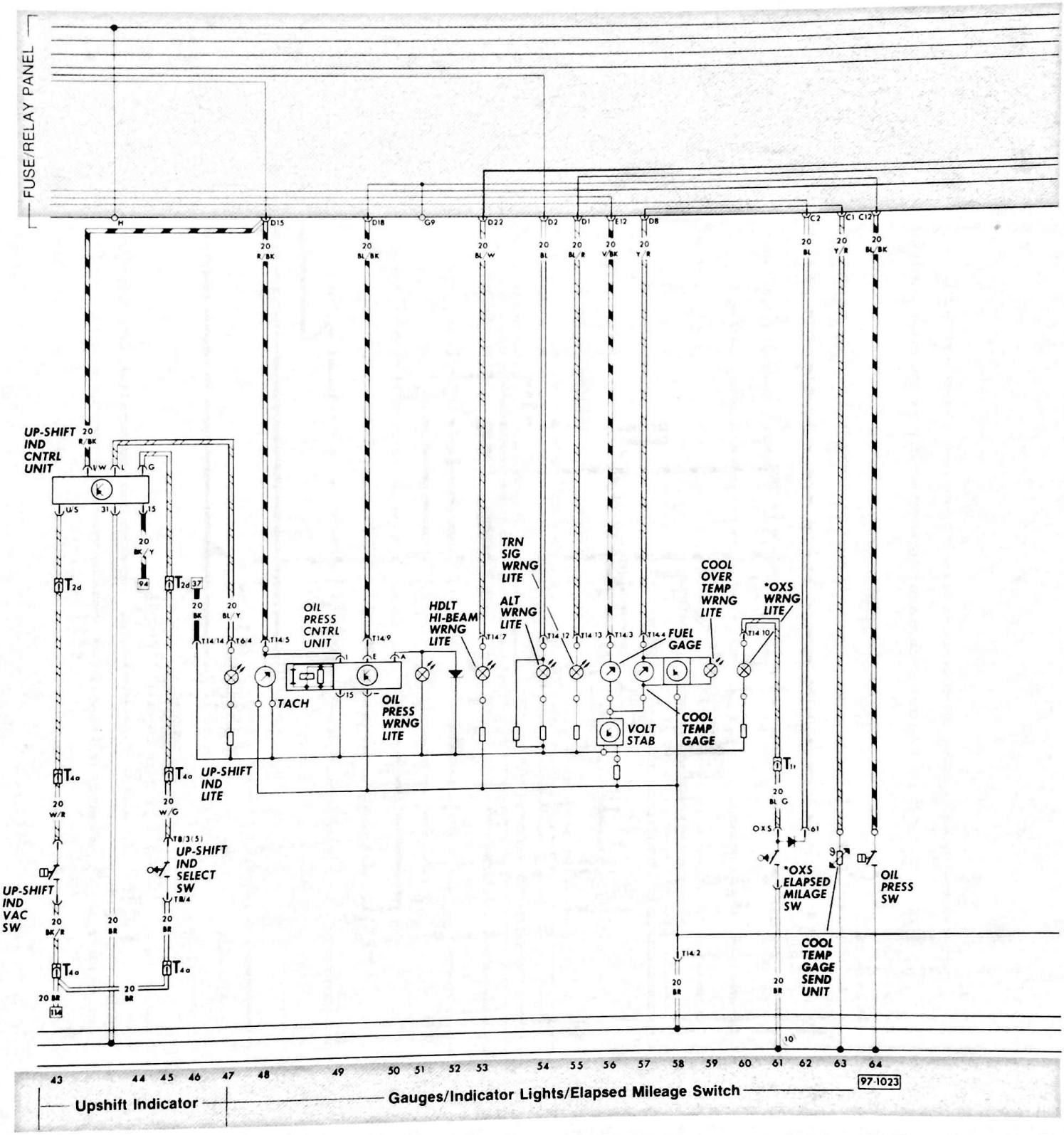
FUSE/RELAY PANEL
UP-SHIFT IND CNTRL UNIT
OIL PRESS CNTRL UNIT
TACH
OIL PRESS WRNG LITE
HDLT HI-BEAM WRNG LITE
TRN SIG WRNG LITE
ALT WRNG LITE
FUEL GAGE
COOL OVER TEMP WRNG LITE
*OXS WRNG LITE
COOL TEMP GAGE
VOLT STAB
UP-SHIFT IND LITE
UP-SHIFT IND SELECT SW
UP-SHIFT IND VAC SW
*OXS ELAPSED MILAGE SW
OIL PRESS SW
COOL TEMP GAGE SEND UNIT
Upshift Indicator
Gauges/Indicator Lights/Elapsed Mileage Switch
97-1023

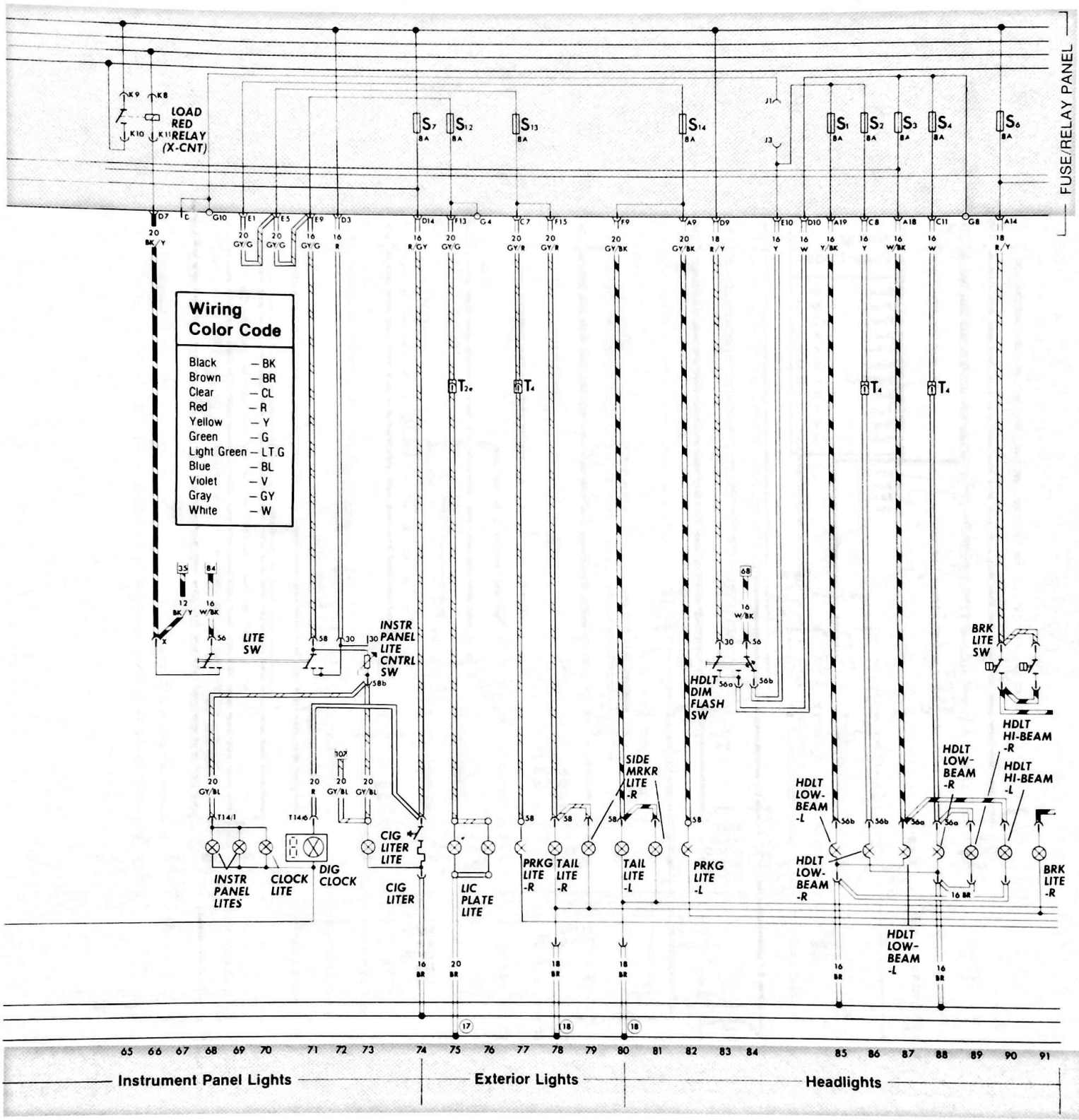
FUSE/RELAY PANEL
LOAD RED RELAY (X-CNT)
Wiring Color Code
Black — BK
Brown — BR
Clear — CL
Red — R
Yellow — Y
Green — G
Light Green — LT.G
Blue — BL
Violet — V
Gray — GY
White — W
LITE SW
INSTR PANEL LITE CNTRL SW
HDLT DIM FLASH SW
BRK LITE SW
HDLT HI-BEAM -R
HDLT LOW-BEAM -R
HDLT HI-BEAM -L
HDLT LOW-BEAM -L
SIDE MRKR LITE -R
INSTR PANEL LITES
CLOCK LITE
DIG CLOCK
CIG LITER LITE
CIG LITER
LIC PLATE LITE
PRKG LITE -R
TAIL LITE -R
TAIL LITE -L
PRKG LITE -L
BRK LITE -R
Instrument Panel Lights
Exterior Lights
Headlights

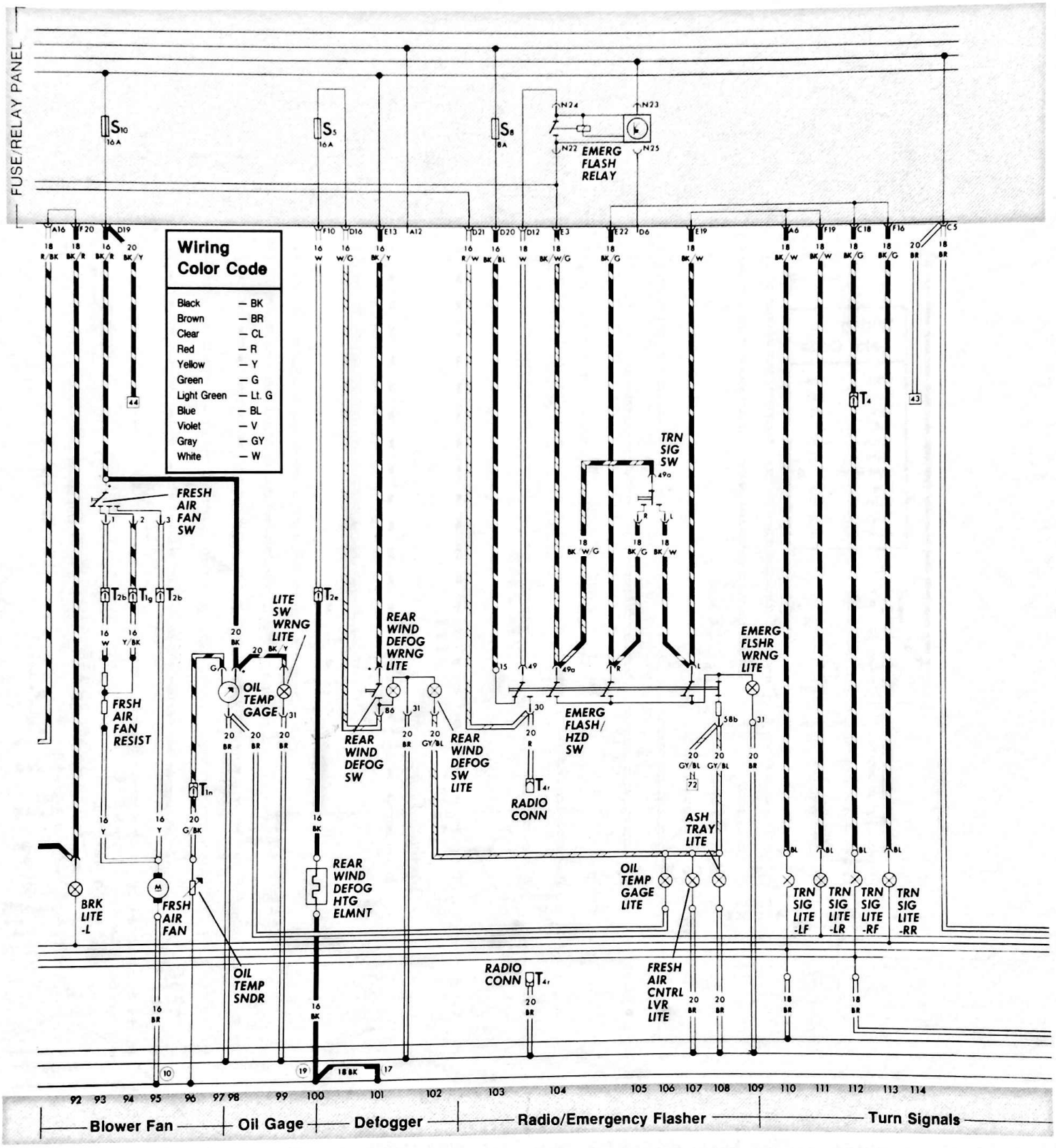
FUSE/RELAY PANEL
Wiring Color Code
Black — BK
Brown — BR
Clear — CL
Red — R
Yellow — Y
Green — G
Light Green — Lt. G
Blue — BL
Violet — V
Gray — GY
White — W
EMERG FLASH RELAY
FRESH AIR FAN SW
FRSH AIR FAN RESIST
LITE SW WRNG LITE
OIL TEMP GAGE
REAR WIND DEFOG WRNG LITE
REAR WIND DEFOG SW
REAR WIND DEFOG SW LITE
EMERG FLASH/ HZD SW
RADIO CONN
TRN SIG SW
EMERG FLSHR WRNG LITE
ASH TRAY LITE
OIL TEMP GAGE LITE
TRN SIG LITE -LF
TRN SIG LITE -LR
TRN SIG LITE -RF
TRN SIG LITE -RR
BRK LITE -L
FRSH AIR FAN
OIL TEMP SNDR
REAR WIND DEFOG HTG ELMNT
FRESH AIR CNTRL LVR LITE
Blower Fan
Oil Gage
Defogger
Radio/Emergency Flasher
Turn Signals

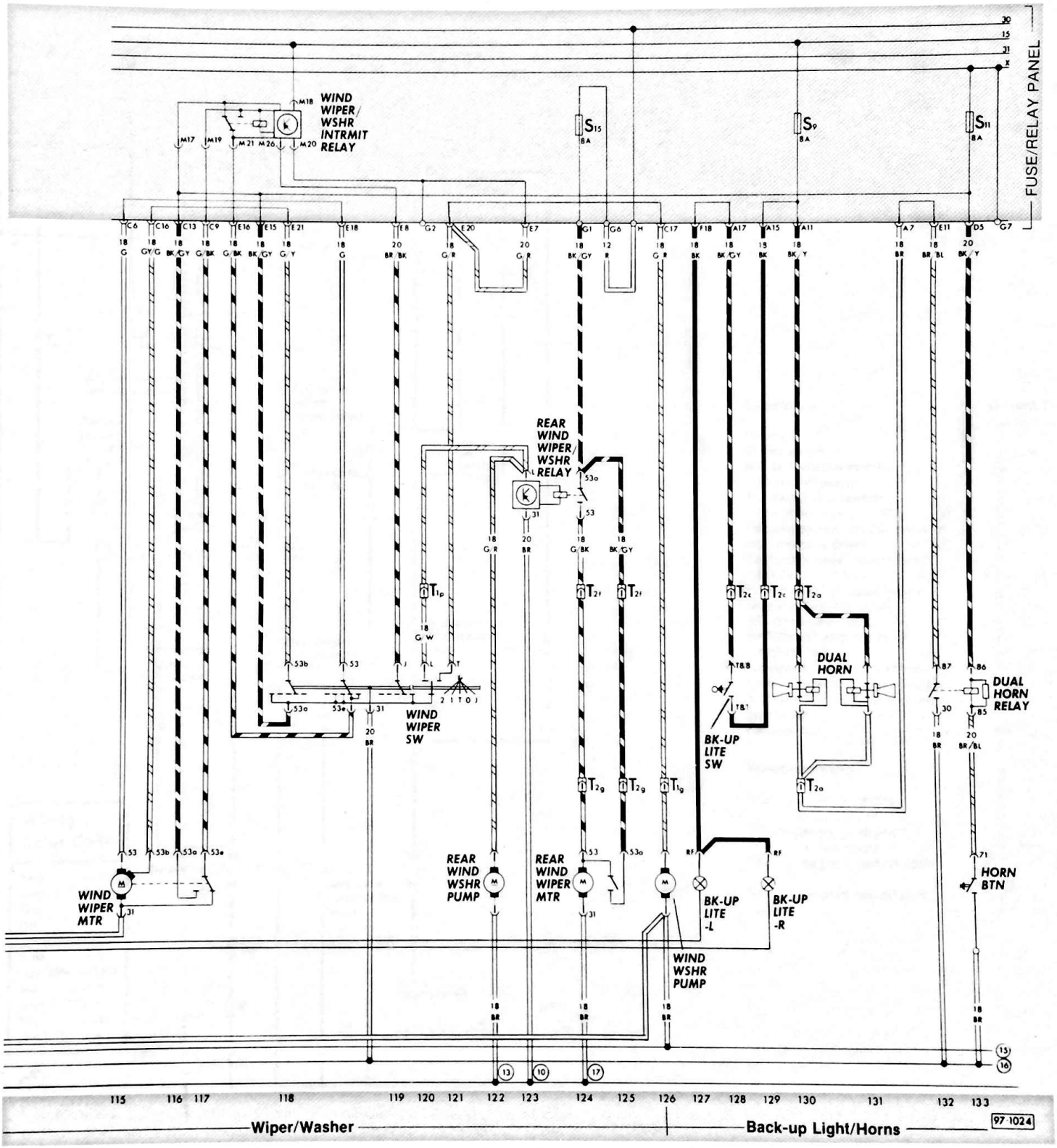
FUSE/RELAY PANEL
WIND WIPER/ WSHR INTRMIT RELAY
REAR WIND WIPER/ WSHR RELAY
WIND WIPER SW
DUAL HORN
DUAL HORN RELAY
BK-UP LITE SW
WIND WIPER MTR
REAR WIND WSHR PUMP
REAR WIND WIPER MTR
BK-UP LITE -L
BK-UP LITE -R
WIND WSHR PUMP
HORN BTN
Wiper/Washer
Back-up Light/Horns
97 1024

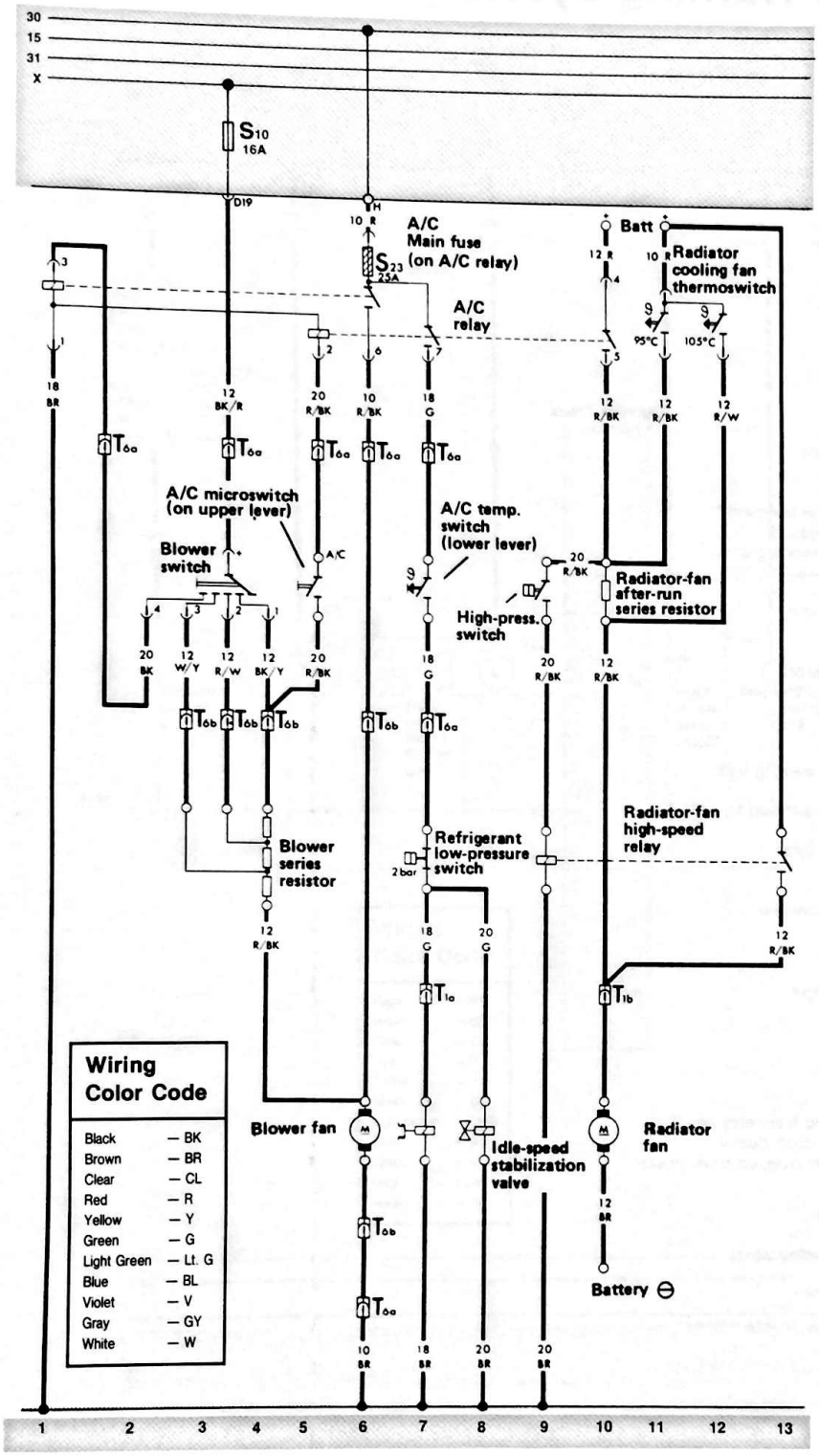

Description	Current Track
Battery +	10, 11
Blower switch	2-4
A/C temperature switch (on lower lever)	7
A/C switch microswitch (on upper lever)	5
Radiator cooling-fan thermoswitch	11, 12
High pressure switch	9
Refrigerant low-pressure switch	7
A/C relay	1-10
Radiator fan high-speed relay	9-13
Blower series resistance	2-4
A/C compressor clutch	7
Radiator-fan after-run series resistance	10
Idle-speed stabilization valve	8
Fuse S10 (on fuse/relay panel)	4
A/C main fuse S23 (on A/C relay)	6
Blower fan	6
Radiator fan	10
Wire Connectors	
T1a — single, in engine compartment	7
T1b — single, in engine compartment	10
T6a — six point, behind dash	2, 3, 5, 6, 7
T6b — six point behind dash	4, 6, 10

Oil Pressure Warning System
Scirocco 1982

Description	Current Track
Alternator warning light	7
C.A.T. warning light	13
C.A.T. elapsed mileage odometer*	14, 15
Coolant temperature gauge	10
Coolant temperature sending unit	16
Coolant temperature warning light (overheating red)	12
Digital clock	13
Engine oil pressure switch	17
Engine oil pressure control unit	4
Fuel gauge	9
Headlight high-beam warning light	6
Ignition/starter switch terminal 15	
Oil pressure warning light	5
Up-shift control light	2
Up-shift indicator control unit terminal 1/W, L	1, 2
Tachometer	3
Turn signal warning light	8
Voltage stabilizer	9

Wire Connectors

T1 — single, next to fuse/relay panel
T6 — six point, on dash cluster
T14 — fourteen point plug, on dash cluster

Ground Connectors

(10) — next to fuse/relay panel

(15) — in wire harness

(16) — wrapped tape, in wire harness

*For USA (49 states and California only)

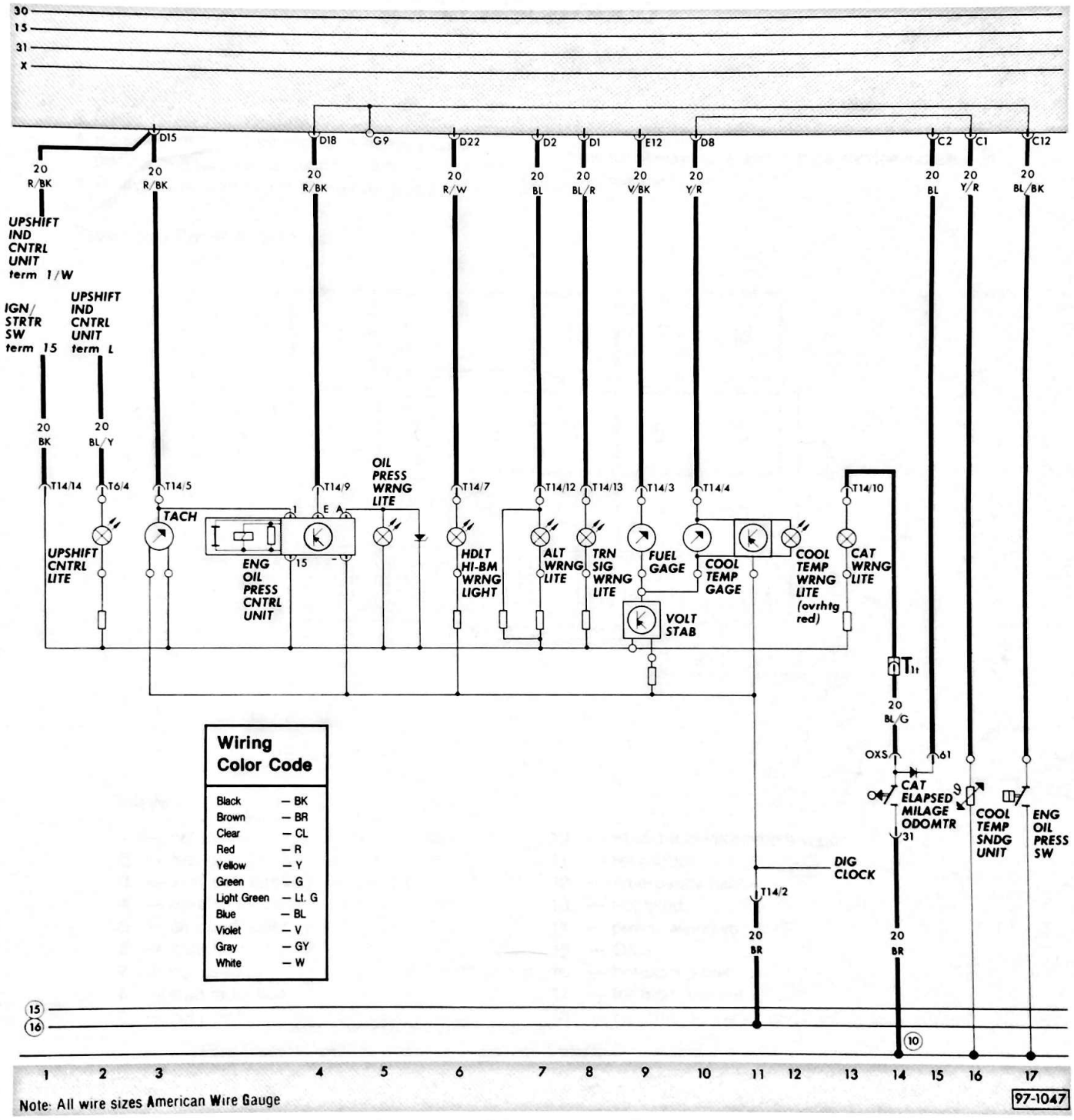
30
15
31
X
D15
D18
G9
D22
D2
D1
E12
D8
C2
C1
C12
20 R/BK
20 R/BK
20 R/BK
20 R/W
20 BL
20 BL/R
20 V/BK
20 Y/R
20 BL
20 Y/R
20 BL/BK
UPSHIFT IND CNTRL UNIT term 1/W
IGN/ STRTR SW term 15
UPSHIFT IND CNTRL UNIT term L
20 BK
20 BL/Y
T14/14
T6/4
T14/5
T14/9
T14/7
T14/12
T14/13
T14/3
T14/4
T14/10
OIL PRESS WRNG LITE
TACH
UPSHIFT CNTRL LITE
ENG OIL PRESS CNTRL UNIT
HDLT HI-BM WRNG LIGHT
ALT WRNG LITE
TRN SIG WRNG LITE
FUEL GAGE
COOL TEMP GAGE
COOL TEMP WRNG LITE (ovrhtg red)
CAT WRNG LITE
VOLT STAB
20 BL/G
OXS
61
CAT ELAPSED MILAGE ODOMTR
31
COOL TEMP SNDG UNIT
ENG OIL PRESS SW
DIG CLOCK
T14/2
20 BR
20 BR
15
16
10
1 2 3 4 5 6 7 8 9 10 11 12 13 14 15 16 17
Wiring Color Code
Black — BK
Brown — BR
Clear — CL
Red — R
Yellow — Y
Green — G
Light Green — Lt. G
Blue — BL
Violet — V
Gray — GY
White — W
Note: All wire sizes American Wire Gauge
97-1047

1983 Scirocco

- Fuse/relay panel now has 22 fuse locations
- Relay panel has 11 positions for relays plus an additional 6 adapter locations on top
- Relays have stamped-in spare part numbers

Note

New fuse/relay panel can not be service installed in previous cars

Fuse/Relay Panel, Front Side

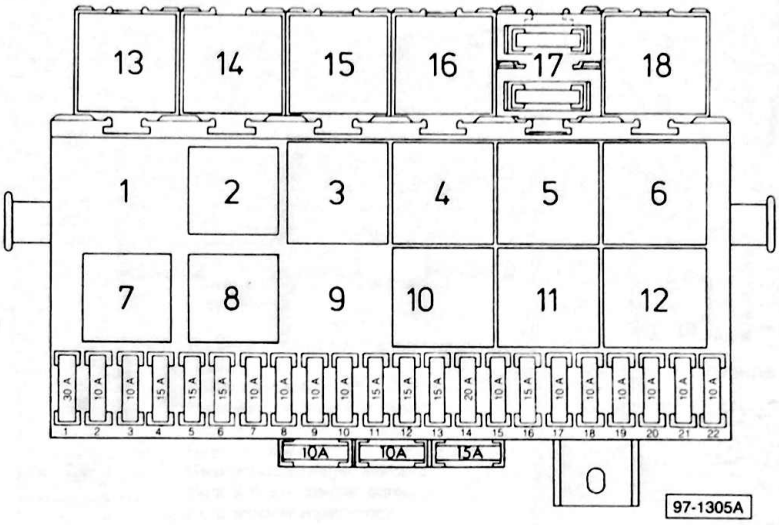

Relays

1 — not used
2 — fuel pump
3 — seat-belt warning
4 — up-shift indicator
5 — air conditioner
6 — dual horn
7 — not used
8 — load reduction
9 — not used
10 — windshield intermittent wiper
11 — rear wiper
12 — emergency flasher
13 — not used
14 — power windows
15 — OXS
16 — hot-start pulse
17 — for fuse adapter
18 — catalytic converter and coolant-level control

Fuse/Relay Panel, Rear Side

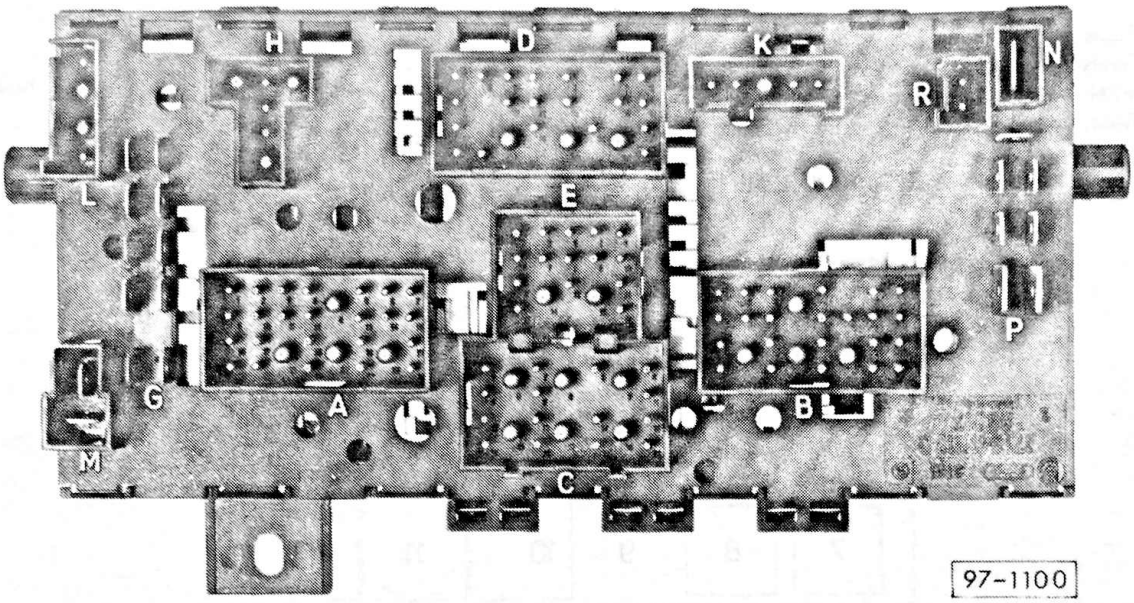

Connections

A —for dashboard wiring harness (blue)
B —for dashboard wiring harness (red)
C —for wiring harness in engine compartment left (yellow)
D —for wiring harness in engine compartment right (white)
E —for wiring harness rear (black)
G —single connector
H —for air conditioner (brown)
K —for seat-belt warning (colorless)
L —for dual horn (grey)
M —for terminal 56 and 56a on headlight switch (black)
N —single connector
P —single connector (terminal 30)
R —not used

1983 Scirocco
General Diagram

Description	Current Track
Alternator	1, 2
Alternator warning light	37
Ashtray light	68
Auxiliary air regulator	20
Back-up light, left	123
Back-up light, right	122
Back-up light switch	123
Battery	4
Brake fluid level warning contact	62
Brake light, left	103
Brake light, right	102
Brake light switch	101, 102
Brake system warning switch	61
Cigarette lighter	75
Cigarette lighter light	73
Clock	63
Clock light	66
Cold starting valve	24
Control pressure regulator	19
Coolant low level warning switch	120
Coolant temperature gauge	40
Coolant temperature sending unit	47
Coolant temperature warning light (overheating red)	42
Defogger cut-out relay (X-contact)	68
Door contact/buzzer switch, left	55, 56
Door contact switch, front left	54
Dual brake & parking brake warning light	59, 60
Electric fuel pump	22
Emergency flasher relay	92, 93
Emergency flasher switch	91-96
Emergency flasher warning light	96
Engine oil pressure control unit	32
Engine oil pressure switch	49
Engine oil-temperature light	71
Fresh air blower series resistance	106
Fresh air control lever light	67
Fresh air fan	108
Fresh air fan switch	106-108
Fuel gauge	39
Fuel gauge sending unit	23
Fuel pump relay	14-22
Fuses, S1-S22, on fuse relay panel	—
Glove compartment light	105
Hall generator	8, 9
Headlight dimmer/flasher switch	77, 78
Headlight high beam, left	81
Headlight high beam, right	84
Headlight high beam warning light	36
Headlight, left	79, 82
Headlight, right	80, 83
Headlight switch light	104
Horn button	129
Horn, dual	124, 125
Ignition coil	11
Ignition distributor	10, 11
Ignition/starter switch	26-28
Interior light, front	53, 54

Description	Current Track
Instrument panel light	64, 65
Instrument panel light switch/dimmer	73
ISS control unit	29-32
Junction box, next to fuse/relay panel	—
License plate light	76, 77
Light switch	68-73
Luggage compartment light	52
Luggage compartment light switch	52
Oil pressure switch (0.3 bar)	48
Oil pressure warning light	24
Oil temperature gauge	127
Oil temperature sensor	128
OXS control unit**	12-17
OXS elapsed milage odometer**	44
OXS frequency valve	16
OXS thermo switch**	13
Parking brake warning light switch	59
Parking light, left	89
Parking light, right	86
Power supply relay fuel-injection system	15-18
Radiator cooling fan thermo switch	130
Radiator fan	130
Radio connection	74
Rear window defogger switch	132
Rear window defogger switch light	64
Rear window defogger warning light	131
Rear window heater element	133
Rear window washer pump	115
Rear window wiper motor	117, 118
Rear window wiper/washer relay	115-117
Resistance wire	16
Seat belt system warning light	58
Seat belt warning system relay	56-58
Side marker light, rear	85
Side marker light, rear	90
Shift indicator	50
Spark plugs	10, 11
Spark plug connectors	10, 11
Starter	5, 6
Tachometer	31
Tail light, left	88
Tail light, right	87
Thermo time switch	25, 26
Transistorized ignition control unit	7-11
Turn signal light, front left	97
Turn signal light, front right	99
Turn signal light, rear left	98
Turn signal light, rear right	100
Turn signal switch	93, 94
Turn signal warning light	38
Up-shift control light	30
Up-shift indicator control unit	29-32
Vacuum switch/up-shift indicator	51
Voltage regulator	1, 2
Voltage stabilizer	39
Windshield washer pump	116
Washer/wiper intermittent relay	113, 114
Windshield-wiper intermittent switch	112-114
Windshield-wiper motor	110, 111

**USA and California only.

Wire Connectors

T1 — single, engine compartment, right rear
T1a — single, engine compartment, left front (next to battery)
T1b — single, behind dashboard
T1d — single, engine compartment (next to master brake cylinder)
T1e — single, next to fuse/relay panel
T1f — single, engine compartment, left front
T1g — single, behind dashboard
T1h — single, behind dashboard
T2 — double, behind dashboard, (next to OXS control unit)
T2a — double, next to fuse/relay panel
T2b — double, engine compartment, (next to master brake cylinder)
T2d — double, behind dashboard
T2e — double, behind dashboard
T2f — double, luggage compartment, left
T2h — double, luggage compartment, left rear
T3 — three-point, behind dashboard
T4 — four-point, behind dashboard
T4 — four-point, engine compartment, (next to transmission)
T6 — six-point, dashboard cluster
T8 — eight-point, on transmission
T14 — fourteen-point, on dashboard cluster

Ground Connectors

(1) — battery/body/transmission
(4) — rear panel
(6) — in rear lid
(7) — on right rear side panel
(8) — cold start valve
(10) — fuse/relay panel
(13) — in luggage compartment, rear right
(15) — in front wiring harness
(16) — in wiring harness of dashboard (wrapped with tape)
(20) — connection for switch/instrument illumination (58b) (wrapped in tape)

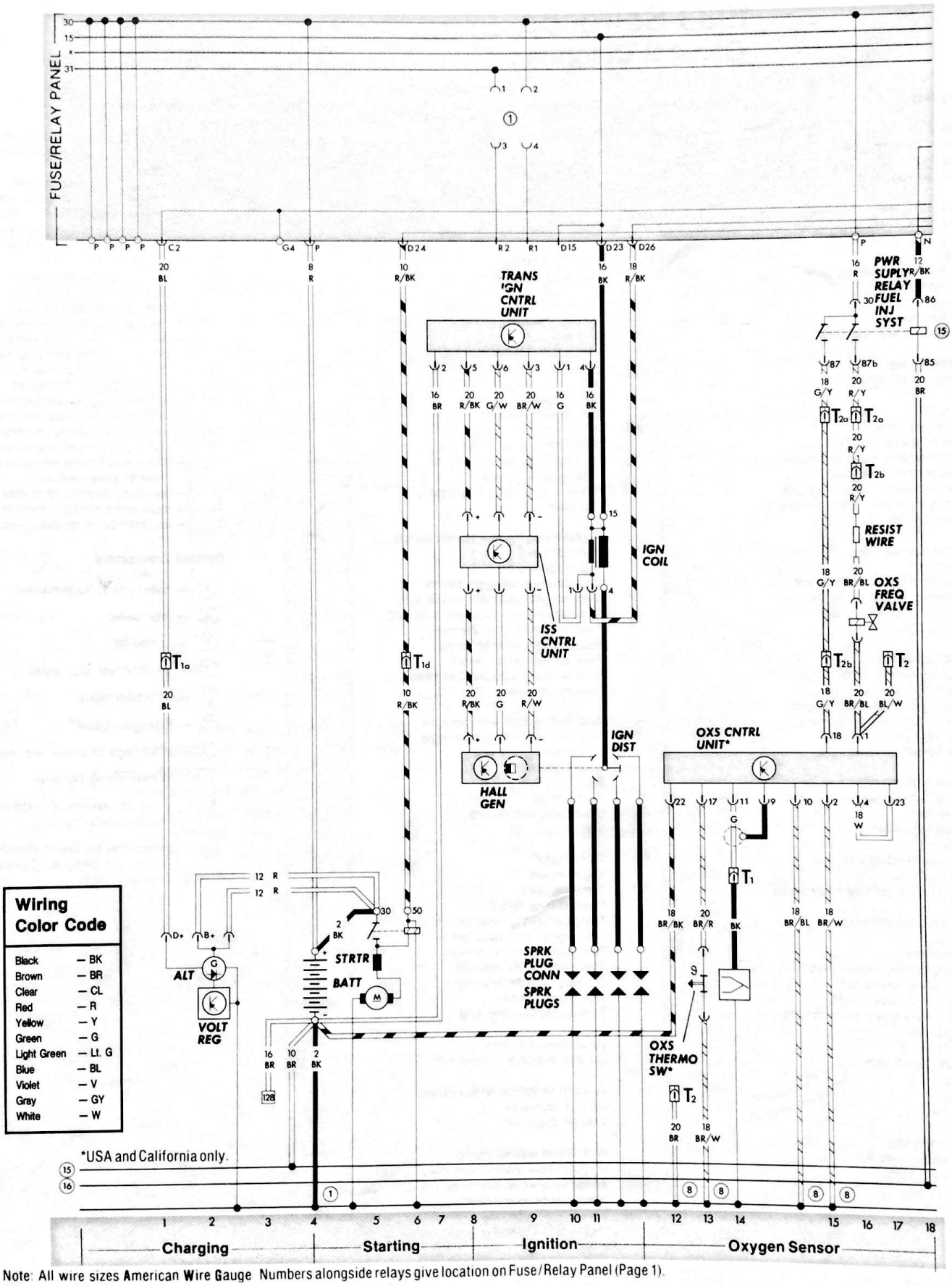

Wiring Color Code	
Black	— BK
Brown	— BR
Clear	— CL
Red	— R
Yellow	— Y
Green	— G
Light Green	— Lt. G
Blue	— BL
Violet	— V
Gray	— GY
White	— W

*USA and California only.

Note: All wire sizes American Wire Gauge Numbers alongside relays give location on Fuse/Relay Panel (Page 1).

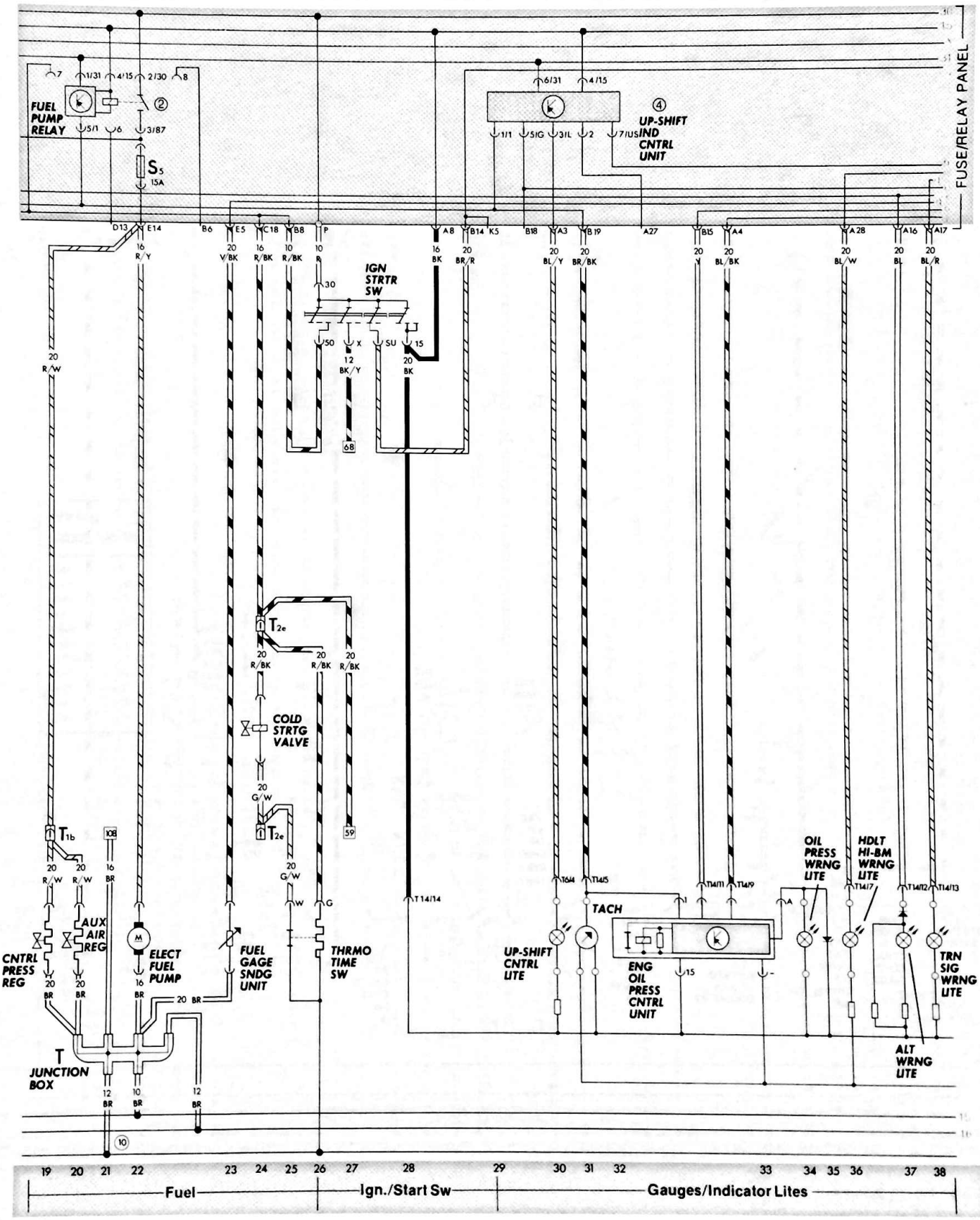
FUSE/RELAY PANEL
FUEL PUMP RELAY
S5
15A
UP-SHIFT IND CNTRL UNIT
IGN STRTR SW
T2e
COLD STRTG VALVE
T1b
AUX AIR REG
CNTRL PRESS REG
ELECT FUEL PUMP
FUEL GAGE SNDG UNIT
THRMO TIME SW
T JUNCTION BOX
TACH
UP-SHIFT CNTRL LITE
ENG OIL PRESS CNTRL UNIT
OIL PRESS WRNG LITE
HDLT HI-BM WRNG LITE
TRN SIG WRNG LITE
ALT WRNG LITE
Fuel
Ign./Start Sw
Gauges/Indicator Lites

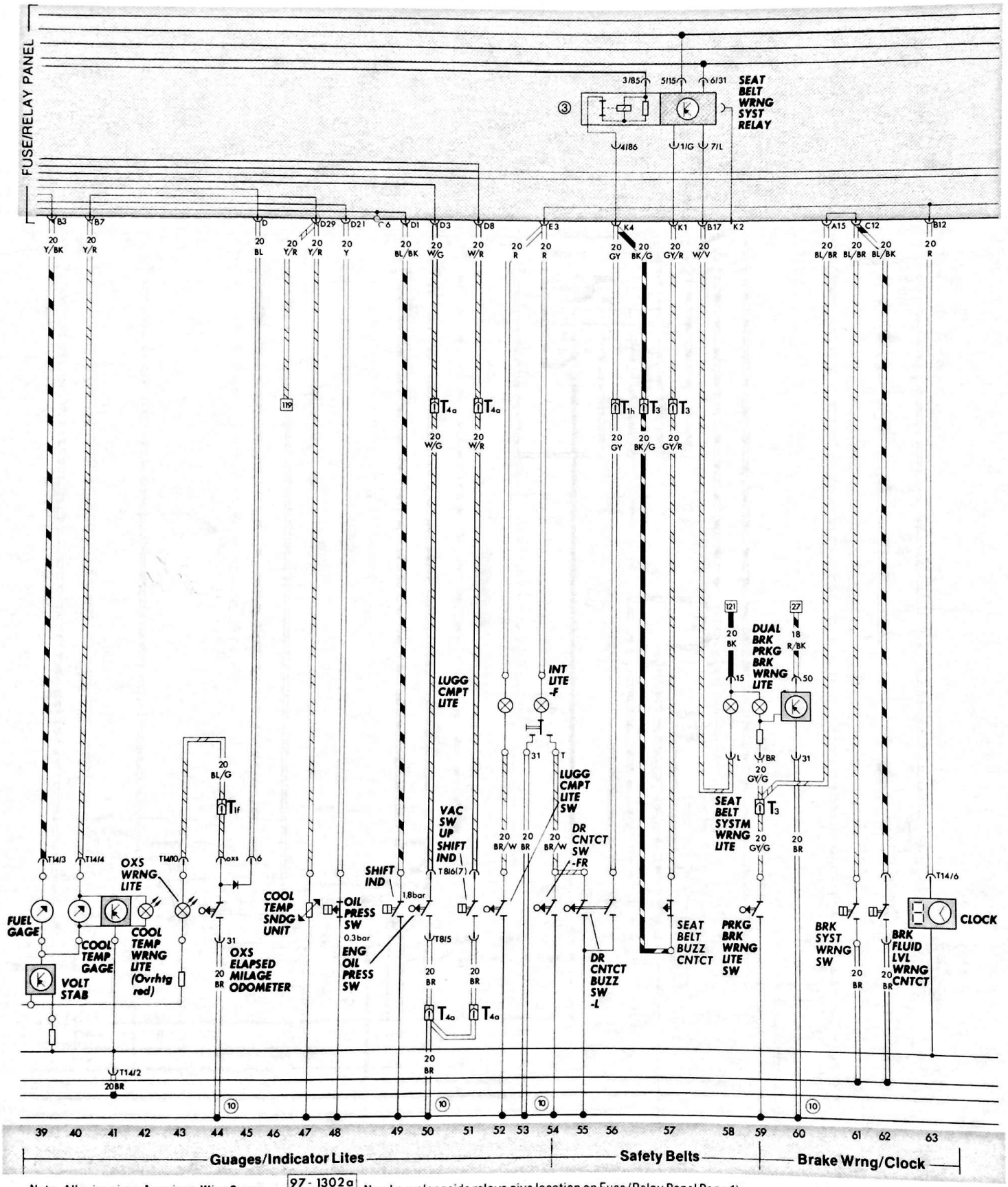

Note: All wire sizes American Wire Gauge 97 - 1302a Numbers alongside relays give location on Fuse/Relay Panel Page 1)

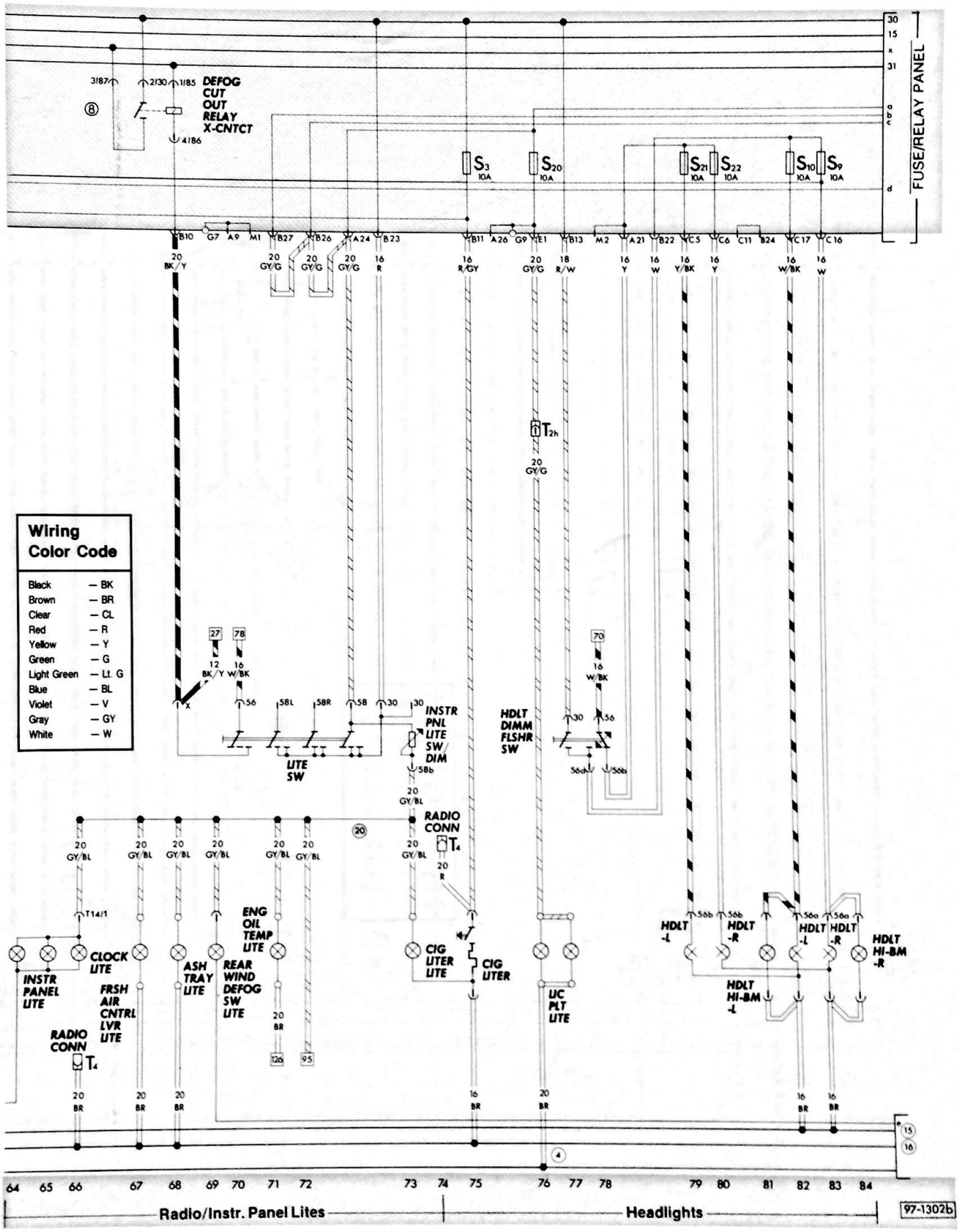
FUSE/RELAY PANEL
DEFOG CUT OUT RELAY X-CNTCT
S3 10A
S20 10A
S21 10A
S22 10A
S10 10A
S9 10A
Wiring Color Code
Black — BK
Brown — BR
Clear — CL
Red — R
Yellow — Y
Green — G
Light Green — Lt. G
Blue — BL
Violet — V
Gray — GY
White — W
LITE SW
INSTR PNL LITE SW/ DIM
HDLT DIMM FLSHR SW
RADIO CONN
CLOCK LITE
INSTR PANEL LITE
FRSH AIR CNTRL LVR LITE
ASH TRAY LITE
REAR WIND DEFOG SW LITE
ENG OIL TEMP LITE
CIG LITER LITE
CIG LITER
UC PLT LITE
HDLT -L
HDLT -R
HDLT HI-BM -L
HDLT HI-BM -R
Radio/Instr. Panel Lites
Headlights
97-1302b

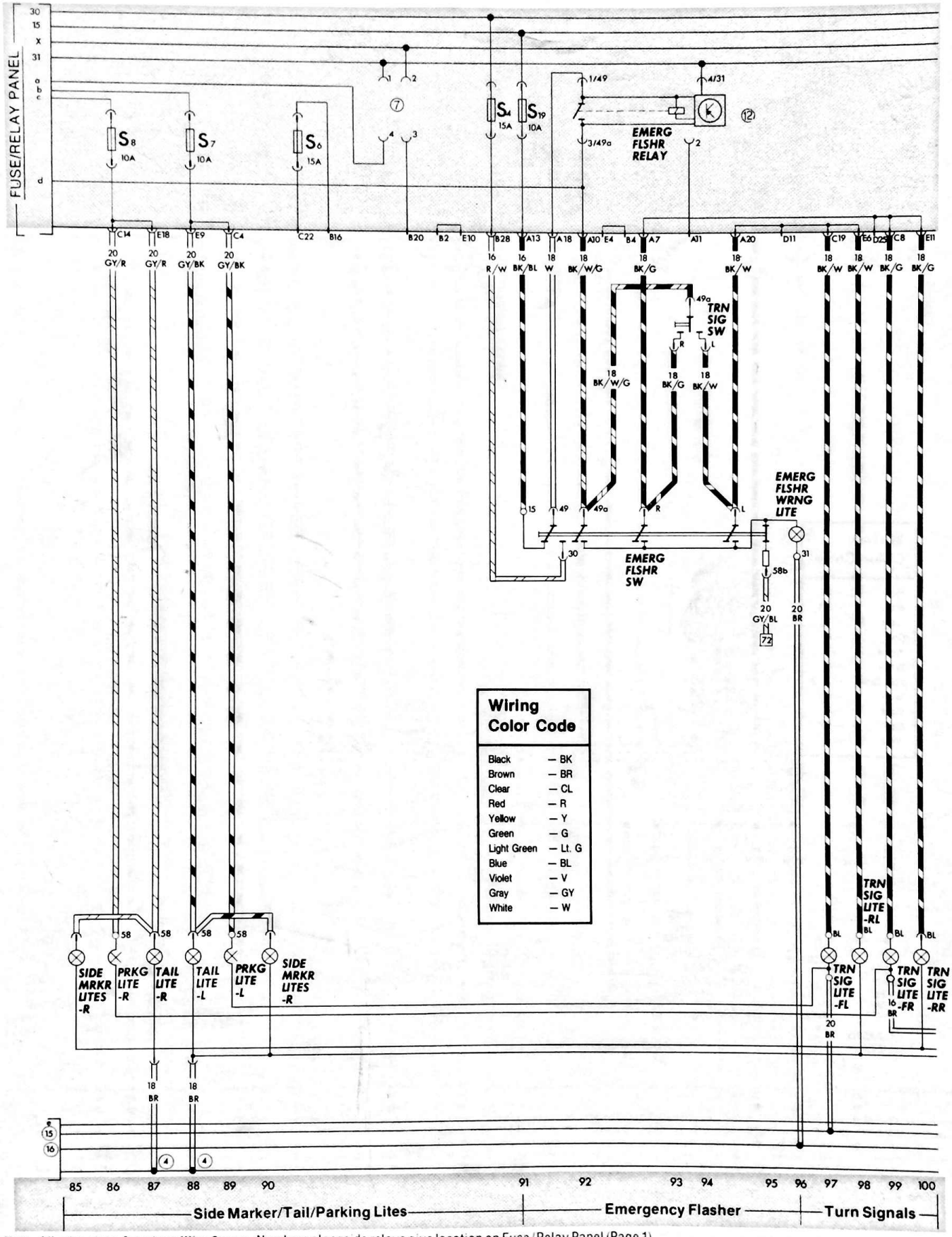

Note: All wire sizes American Wire Gauge. Numbers alongside relays give location on Fuse/Relay Panel (Page 1)

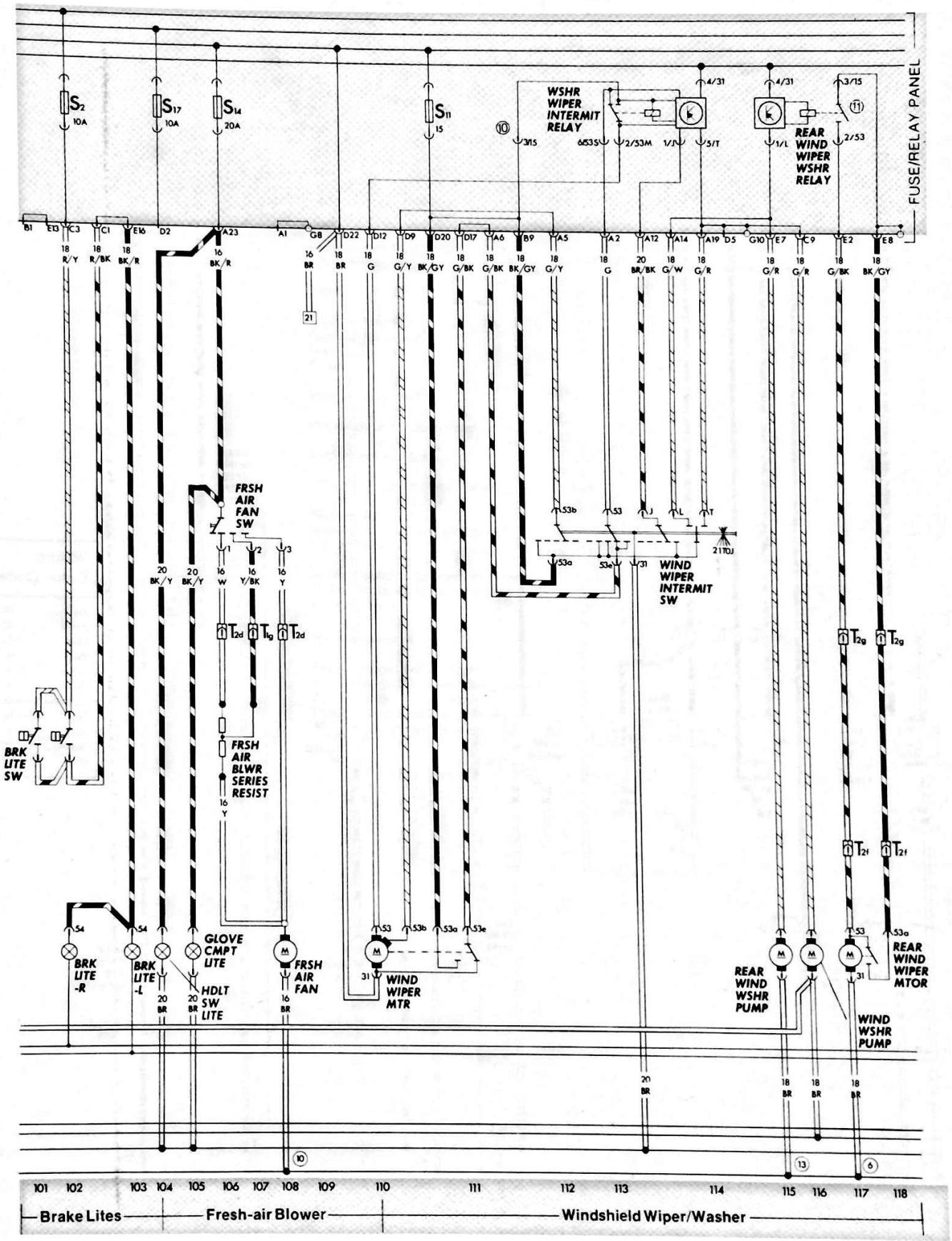
FUSE/RELAY PANEL
S2 10A
S17 10A
S14 20A
S11 15
WSHR WIPER INTERMIT RELAY
REAR WIND WIPER WSHR RELAY
FRSH AIR FAN SW
WIND WIPER INTERMIT SW
BRK LITE SW
FRSH AIR BLWR SERIES RESIST
BRK LITE -R
BRK LITE -L
GLOVE CMPT LITE
HDLT SW LITE
FRSH AIR FAN
WIND WIPER MTR
REAR WIND WSHR PUMP
WIND WSHR PUMP
REAR WIND WIPER MTOR
Brake Lites
Fresh-air Blower
Windshield Wiper/Washer

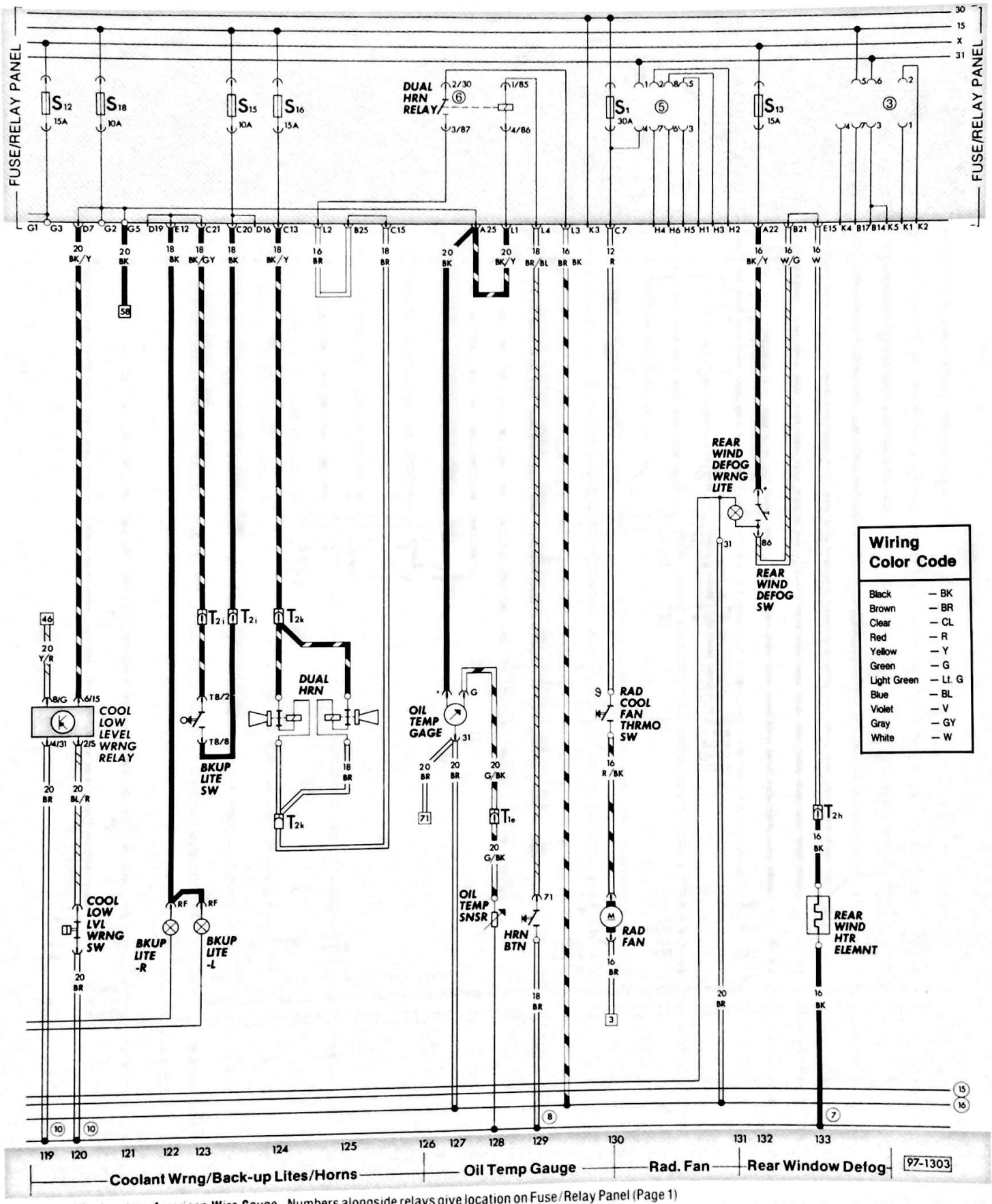

Note: All wire sizes American Wire Gauge. Numbers alongside relays give location on Fuse/Relay Panel (Page 1)

Air Conditioning
1983 SCIROCCO

Description	Current Track
Air conditioner compressor clutch	8
Air conditioner relay	5-10
Air conditioner switch	5
Air conditioner temperature switch, on lower lever	8
Battery	9-11
Fresh-air fan	7
Fresh-air fan switch	2-4
Fuse	11
Fuse	3
High pressure switch	10
Idle speed stabilization valve	9
Main heater A/C fuse	9
Pressure switch for refrigerant, 1.7 bar	8
Radiator fan	10
Radiator cooling fan thermoswitch	10, 11
Run-on relay	11, 12
Series resistance for fresh-air blower	3, 4
Series resistance for radiator fan afterrun	10

Wire connectors

T1a — single, behind dash
T1b — single, in engine compartment
T1c — single, behind dash
T5 — 5-point, behind dash
T6 — 6-point, behind dash

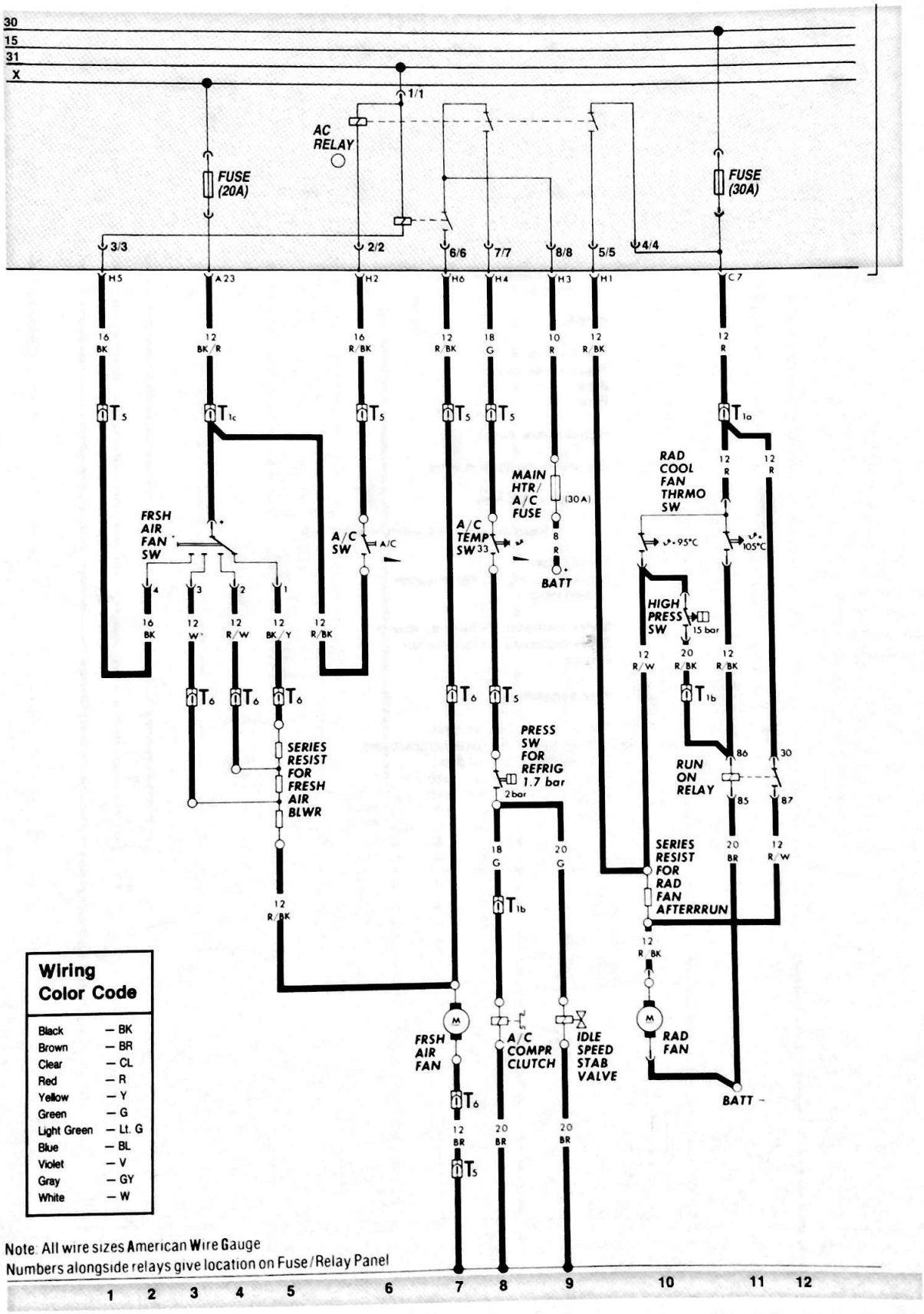

Wiring Color Code

Black	— BK
Brown	— BR
Clear	— CL
Red	— R
Yellow	— Y
Green	— G
Light Green	— Lt. G
Blue	— BL
Violet	— V
Gray	— GY
White	— W

Note: All wire sizes American Wire Gauge
Numbers alongside relays give location on Fuse/Relay Panel

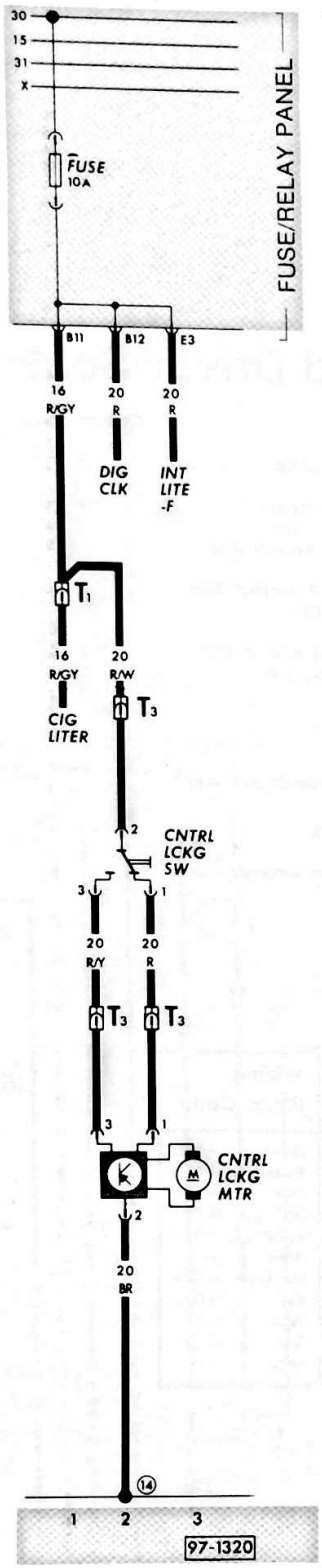

Power Door Locks

Description	Current Track
Central locking motor	2, 3
Central locking switch	2, 3
Cigarette lighter	1
Digital clock	2
Interior light, front	3
Fuse S3	1

Wire connectors

T1 — single, next to fuse/relay panel
T3 — 3-point, below dash, left

Ground Connectors

(14) — next to Bi-pressure pump

Wiring Color Code

Black	— BK
Brown	— BR
Clear	— CL
Red	— R
Yellow	— Y
Green	— G
Light Green	— Lt. G
Blue	— BL
Violet	— V
Gray	— GY
White	— W

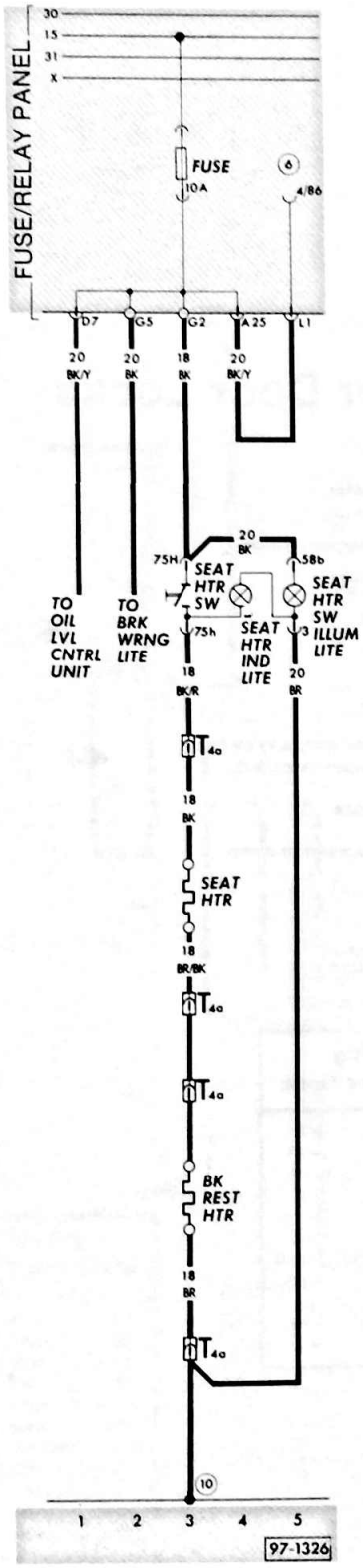

Heated Driver Seat

Description	Current Track
Fuse on fuse/relay panel	3
Heating element for backrest	3
Heating element for seat	3
Heated driver seat indicator light	5
Seat heater switch illumination light	5
Switch for heated seat	3-5
To control unit for oil level control	1
To dual brake/parking brake warning light	2

Wire Connectors

T4a — 4-point, below driver's seat

Ground connectors

(10) — on bracket of fuse/relay panel

Relays

6 — dual horn

Wiring Color Code

Black	— BK
Brown	— BR
Clear	— CL
Red	— R
Yellow	— Y
Green	— G
Light Green	— Lt. G
Blue	— BL
Violet	— V
Gray	— GY
White	— W

Adjustable/heated outside rear-view mirror

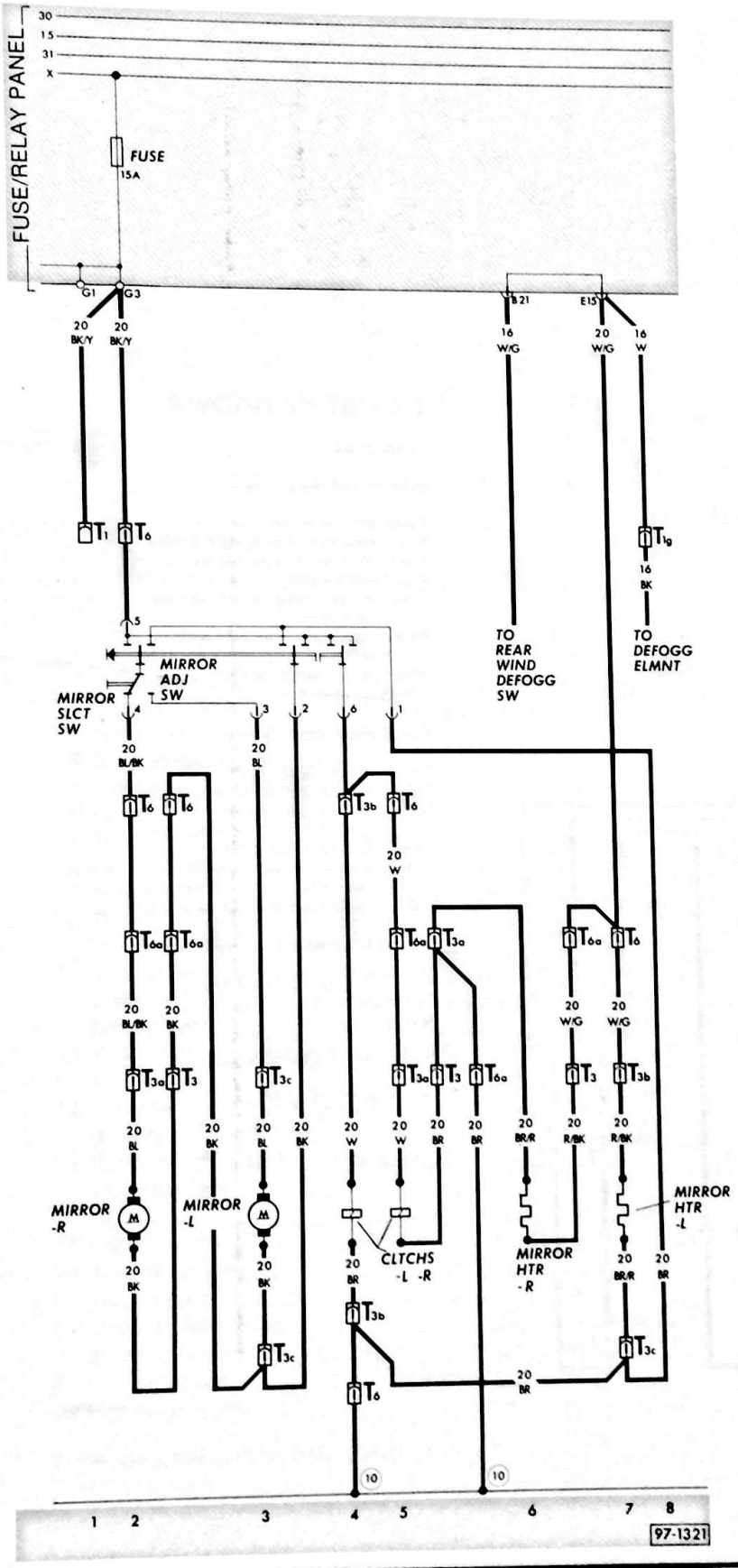

Description	Current Track
Fuse on fuse/relay panel (15A)	2
Left mirror heating element	7
Left mirror motor	3
Magnetic clutch for left mirror	4
Magnetic clutch for right mirror	5
Mirror adjusting switch	2-5
Mirror selector switch	2-5
Rear window defogger switch	6
Right mirror heating element	6
Right mirror motor	2

Wire Connectors

T1 — single, behind dash
T3 — 3-point, in right door
T3a — 3-point, in right door
T3b — 3-point, in left door
T3c — 3-point, in left door
T6 — 6-point, below dash, left
T6a — 6-point, below dash

Ground Connectors

(10) — on bracket of fuse/relay panel

Wiring Color Code

Black	— BK
Brown	— BR
Clear	— CL
Red	— R
Yellow	— Y
Green	— G
Light Green	— Lt. G
Blue	— BL
Violet	— V
Gray	— GY
White	— W

Power windows

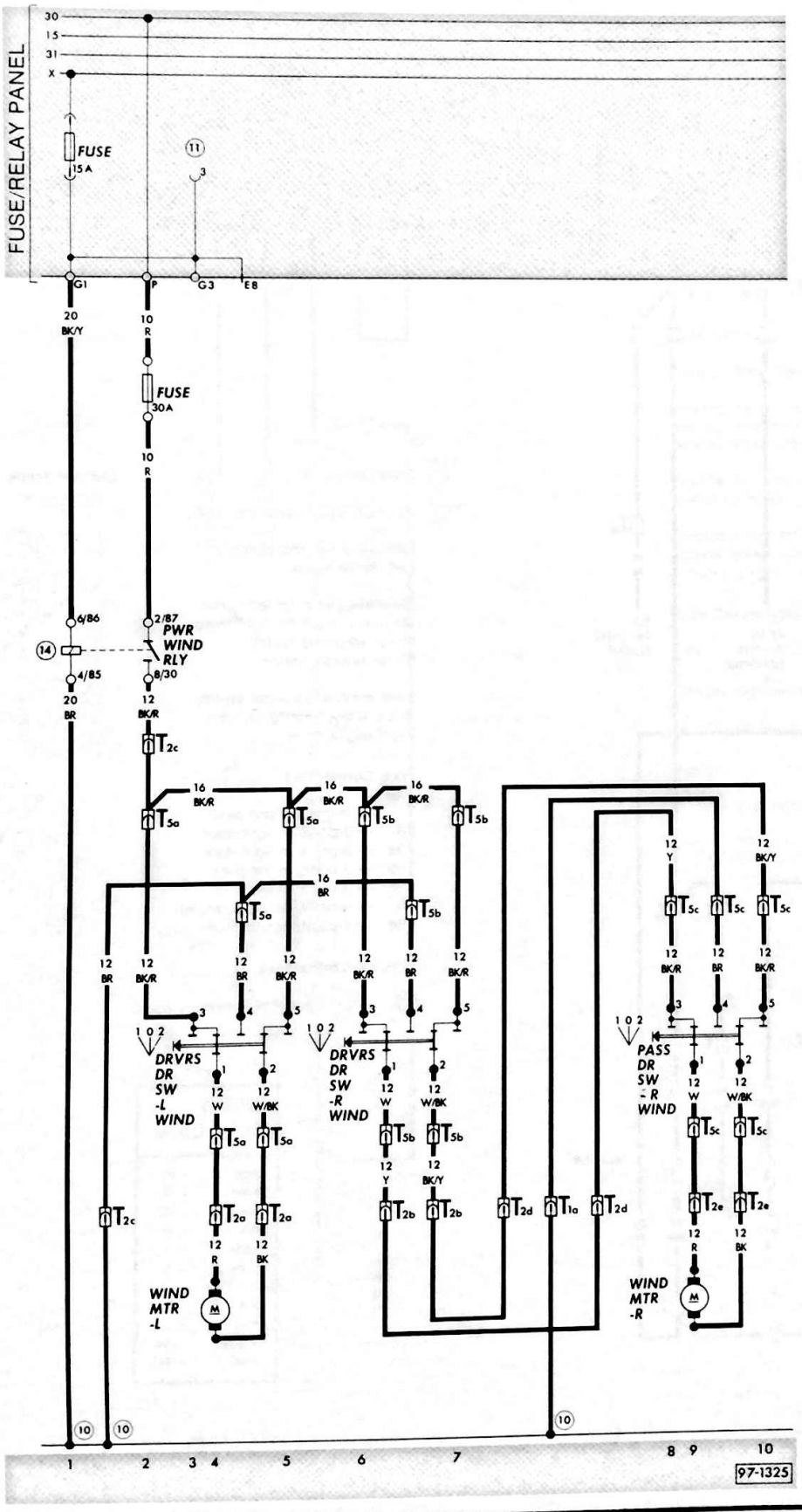

Power Windows

Description	Current Track
Fuse on fuse/relay panel	1
Power window in-line fuse	2
Power window motor for right window	9
Power window motor for left window	4
Power window relay	1, 2
Power window switch for left window, in driver's door	3-5
Power window switch for right window, in driver's door	6, 7
Power window switch for right window, in passenger's door	8-10

Wire Connectors

T1a — single, below dash
T2a — double, behind driver's door panel
T2b — double, below dash
T2c — double, next to fuse/relay panel
T2d — double, below dash
T2e — double, behind passenger's door panel
T5a — five-point, behind driver's door panel
T5b — five-point, behind driver's door panel

Ground Connectors

(10) — on bracket of fuse/relay panel

Relays

11 — rear window washer/wiper

14 — power windows

Scirocco 1984

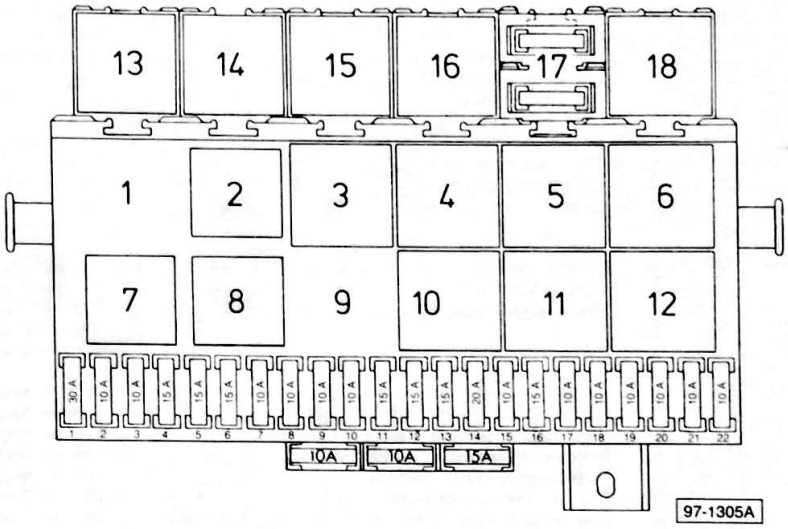

Fuse/Relay Panel

Fuse Arrangement

according to the numbers on fuse panel (from left to right):

		Amp.
1	Radiator fan	30
2	Stop lights	10
3	Cigarette lighter, radio, clock, interior lights, central locking system*	15
4	Emergency flasher system	15
5	Electric fuel pump*	15
6	vacant	
7	Tail, parking and side marker lights left	10
8	Tail, parking and side marker lights right	10
9	High beam right, high beam indicator light	10
10	High beam left	10
11	Windshield wipers and washer	15
12	Rear window wiper and washer*, coolant level checking device*, outside rear view mirror adjustment*	15
13	Rear window defogger, heated rear view mirror*	15
14	Fresh air fan, air conditioner* (factory installed)	20
15	Back-up lights, shift console light (Automatic Transmission)	10
16	Horn	15
17	vacant	
18	Throttle switch	10
19	Turn signals	10
20	License plate lights, glove compartment light	10
21	Low beam left	10
22	Low beam right	10

Separate fuses above fuse panel:

Power windows* 30

*where applicable

Relays

1 — not used
2 — fuel pump
3 — seat-belt warning
4 — up-shift indicator
5 — air conditioner
6 — dual horn
7 — not used
8 — load reduction (x-contact)
9 — not used
10 — windshield wiper intermittent
11 — rear wiper
12 — emergency flasher
13 — not used
14 — power windows
15 — OXS power supply
16 — idle speed boost
17 — for fuse adapter
18 — catalytic converter and coolant-level control

Scirocco 1984

Description	Current Track
Alternator	1, 2
Alternator warning light	38
Ashtray light	67
Auxiliary air regulator	21
Back-up light, left	120
Back-up light, right	119
Back-up light switch	121
Battery	3
Brake and parking brake indicator light	60, 61
Brake fluid level warning switch	62
Brake light, left	102
Brake light, right	101
Brake light switch	121
CAT elapsed mileage indicator	44
Cigar lighter	73
Cigar lighter light	71
Clock	63
Clock light	65
Cold start valve	
Coolant over-temp warning light	43
Coolant temperature gauge	41, 42
Coolant temperature sending unit	47
Control pressure regulator	20
Door contact/buzzer switch, left	55, 56
Door contact switch, right front	54
Engine oil pressure control unit	33, 34
Engine oil pressure switch (1.8 bar)	48
Engine oil pressure switch (0.3 bar)	49
Engine oil temperature light	69
Emergency flasher relay	91-93
Emergency flasher switch	90-95
Emergency flasher warning light	95
Fresh air fan	106
Fresh air fan switch	104-106
Fuel enrichment switch	13
Fuel gauge	40
Fuel gauge sending unit	24
Fuel pump	23
Fuel pump relay	20
Glove compartment light	104
Hall generator	7, 8
Headlight dimmer/flasher switch	76, 77
Headlight, high beam, left	80
Headlight, high beam, right	83
Headlight, high beam warning light	37
Headlight, low beam, left	78, 81
Headlight, low beam, right	79, 82
Headlight switch light	103
Horns	122, 123
Horn button	128
Horn relay	125, 127
Idle speed stabilizer valve	117
Ignition coil	9, 10
Ignition control unit	6-10
Ignition distributor	9, 11
Interior light, front	53, 54
Instrument panel light	64
Instrument panel light switch/dimmer	71
Junction box (behind fuse/relay panel)	
License plate lights	74, 75
Luggage compartment light	52
Luggage compartment light switch	52
Light switch	66-71

Description	Current Track
Oil pressure warning light	35
Oil temperature gauge	125
Oil temperature sensor	126
OXS control unit	12-18
OXS elapsed mileage counter	45, 46
OXS frequency valve	17
OXS thermoswitch	14
Oxygen sensor	15
Parking brake warning light switch	60
Parking light, left	88
Parking light, right	85
Power supply relay, FI	16-19
Radio connection	65, 72
Radiator cooling fan thermoswitch	129
Radiator fan	129
Rear window defogger indicator light	130
Rear window defogger switch	131
Rear window defogger switch light	68
Rear window heater element	132
Rear window washer pump	112
Rear window wiper motor	114-115
Rear window wiper/washer relay	112-114
Resistance wire	17
Safety belt switch, left	57
Seat belt warning switch relay	56-58
Series resistance (fresh air blower)	105
Side marker lights, rear	84-89
Spark plugs	9-11
Spark plug connectors	9-11
Starter	4-5
Tachometer	32
Tail light, left	85
Tail light, right	86
Time delay relay (for x-contact)	65, 66
Transmission switch, upshift indicator	47
Turn signal indicator light	39
Turn signal light, left front	96
Turn signal light, left rear	97
Turn signal light, right front	98
Turn signal light, right rear	99
Turn signal switch	92, 93
Upshift control light	31
Upshift indicator control unit	30-33
Vacuum switch, upshift indicator	51
Voltage regulator	1, 2
Voltage stabilizer	40
Washer/wiper intermittent relay	110, 111
Windshield washer pump	113
Windshield wiper/washer intermittent switch	109-111
Windshield wiper motor	107, 108

Wire Connectors

T — junction box, by fuse/relay panel
T1a — single, left of battery
T1b — single, behind dashboard
T1d — single, by brake master cylinder
T1f — single, engine compartment, left
T2 — double, behind dashboard by OXS control
T2a — double, next to fuse/relay panel
T2b — double, by brake master cylinder
T2e — double, behind dashboard
T7 — 7 point, short white housing, instr. cluster
T7a — 7 point, long black housing, instr. cluster
T7b — 7 point, long white housing, instr. cluster
T7c — 7 point, short black housing, instr. cluster

T1c — single, behind dashboard
T1h — single, behind dashboard
T2c — engine compart. by trans. switch
T2h — double, luggage compartment, right
T2h — double, engine comp. by trans. switch
T3 — 3 point, behind dashboard
T4 — 4 point, behind dashboard
T8 — 8 point, on transmission

T1e — single, next to fuse/relay panel
T1g — single, behind dashboard
T2d — double, behind dashboard
T2t — double, luggage comp., rear left
T2g — double, behind dashboard
T2i — double, engine comp., left
T2k — double, below battery

Ground Connections

① — from battery to trans. via body
④ — rear panel
⑥ — on rear deck lid
⑦ — on right door post
⑧ — on steering gear
⑩ — on fuse/relay panel
⑬ — on luggage comp., rear wheel housing
⑮ — front wiring harness
⑯ — in dashboard wrapped in tape
⑳ — for light switch and instr. light, taped in dashboard harness

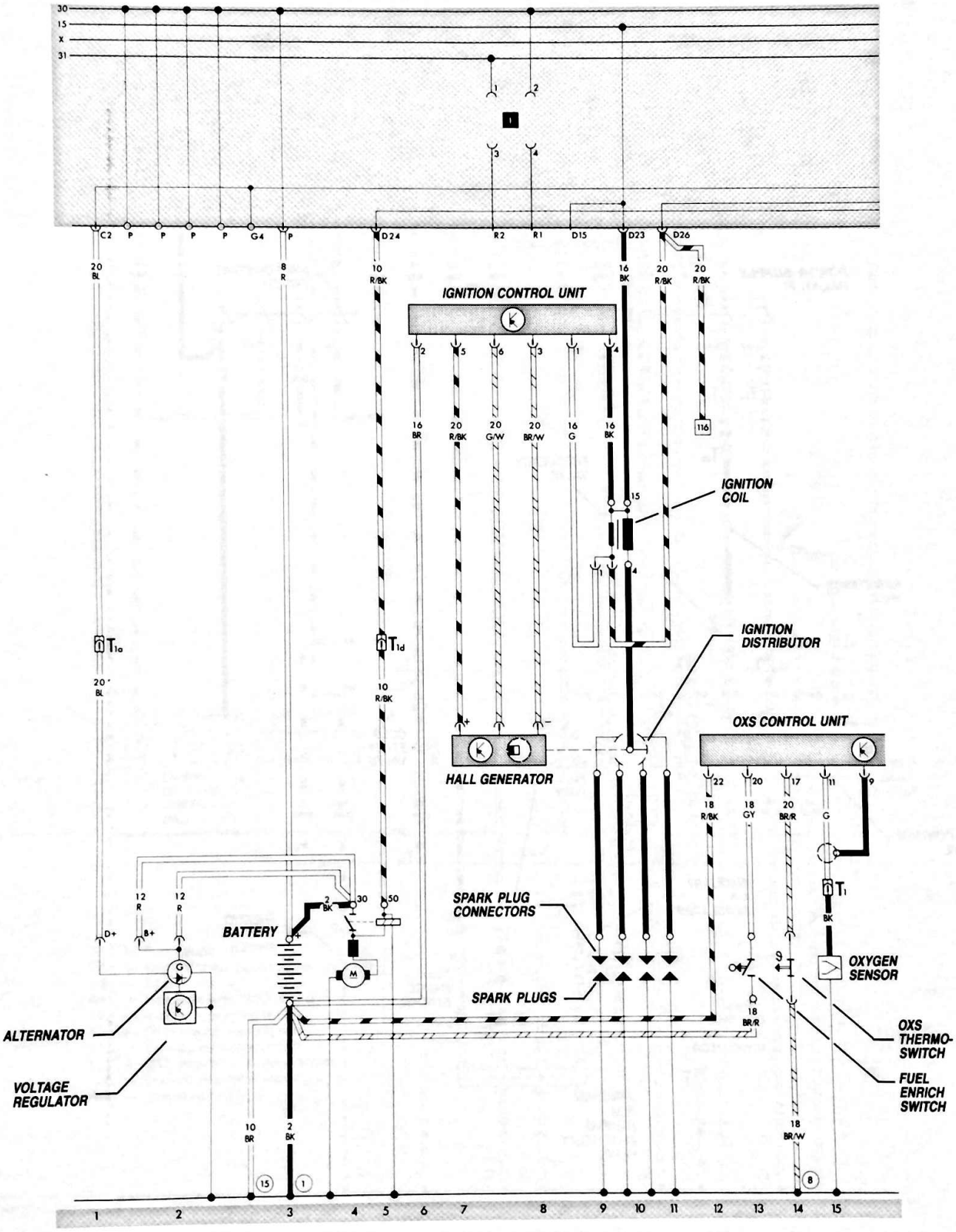
IGNITION CONTROL UNIT
IGNITION COIL
IGNITION DISTRIBUTOR
OXS CONTROL UNIT
HALL GENERATOR
SPARK PLUG CONNECTORS
SPARK PLUGS
BATTERY
ALTERNATOR
VOLTAGE REGULATOR
OXYGEN SENSOR
OXS THERMO-SWITCH
FUEL ENRICH SWITCH

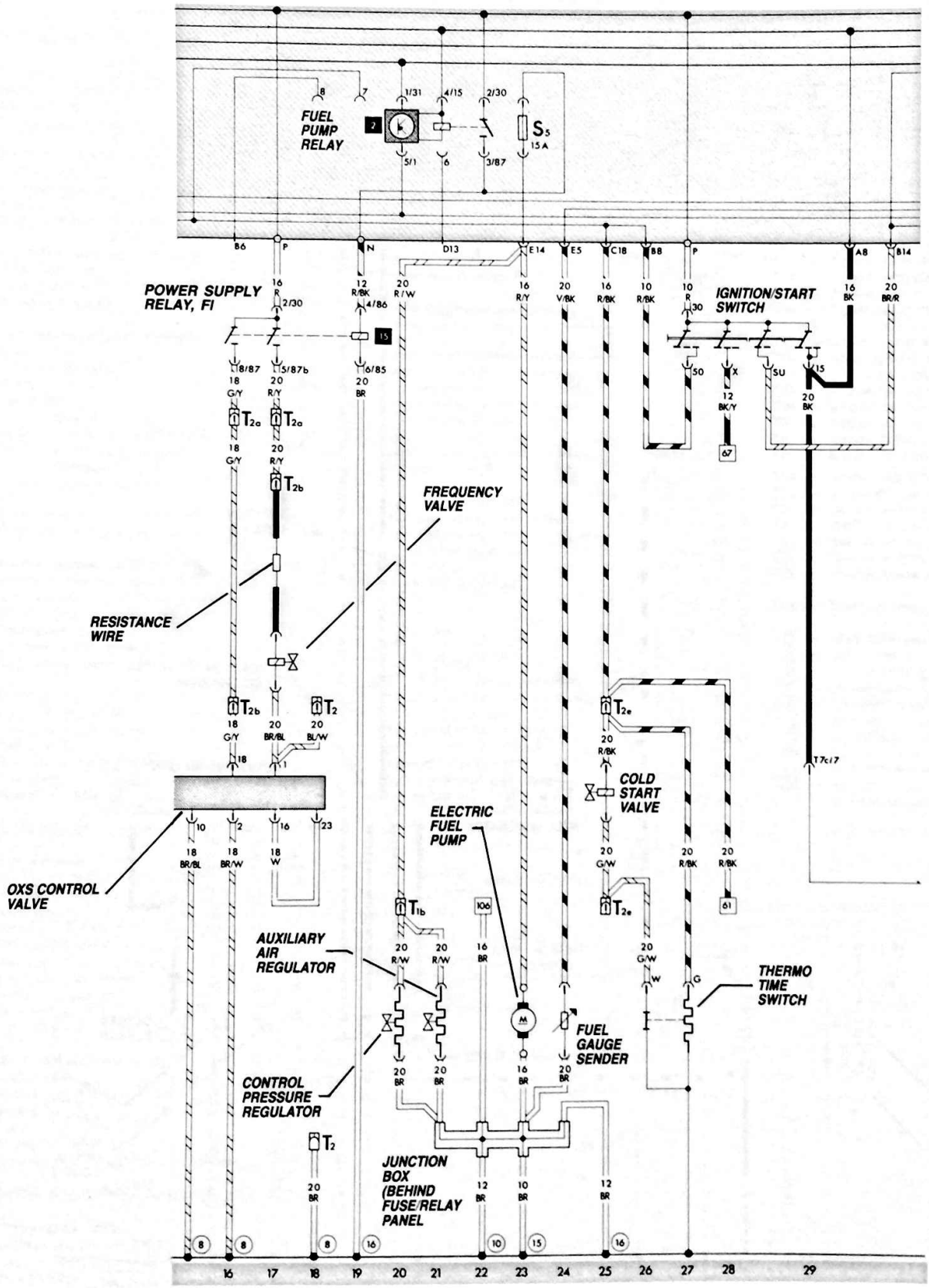
FUEL PUMP RELAY
S5
15A
POWER SUPPLY RELAY, FI
IGNITION/START SWITCH
FREQUENCY VALVE
RESISTANCE WIRE
COLD START VALVE
ELECTRIC FUEL PUMP
OXS CONTROL VALVE
AUXILIARY AIR REGULATOR
THERMO TIME SWITCH
FUEL GAUGE SENDER
CONTROL PRESSURE REGULATOR
JUNCTION BOX (BEHIND FUSE/RELAY PANEL

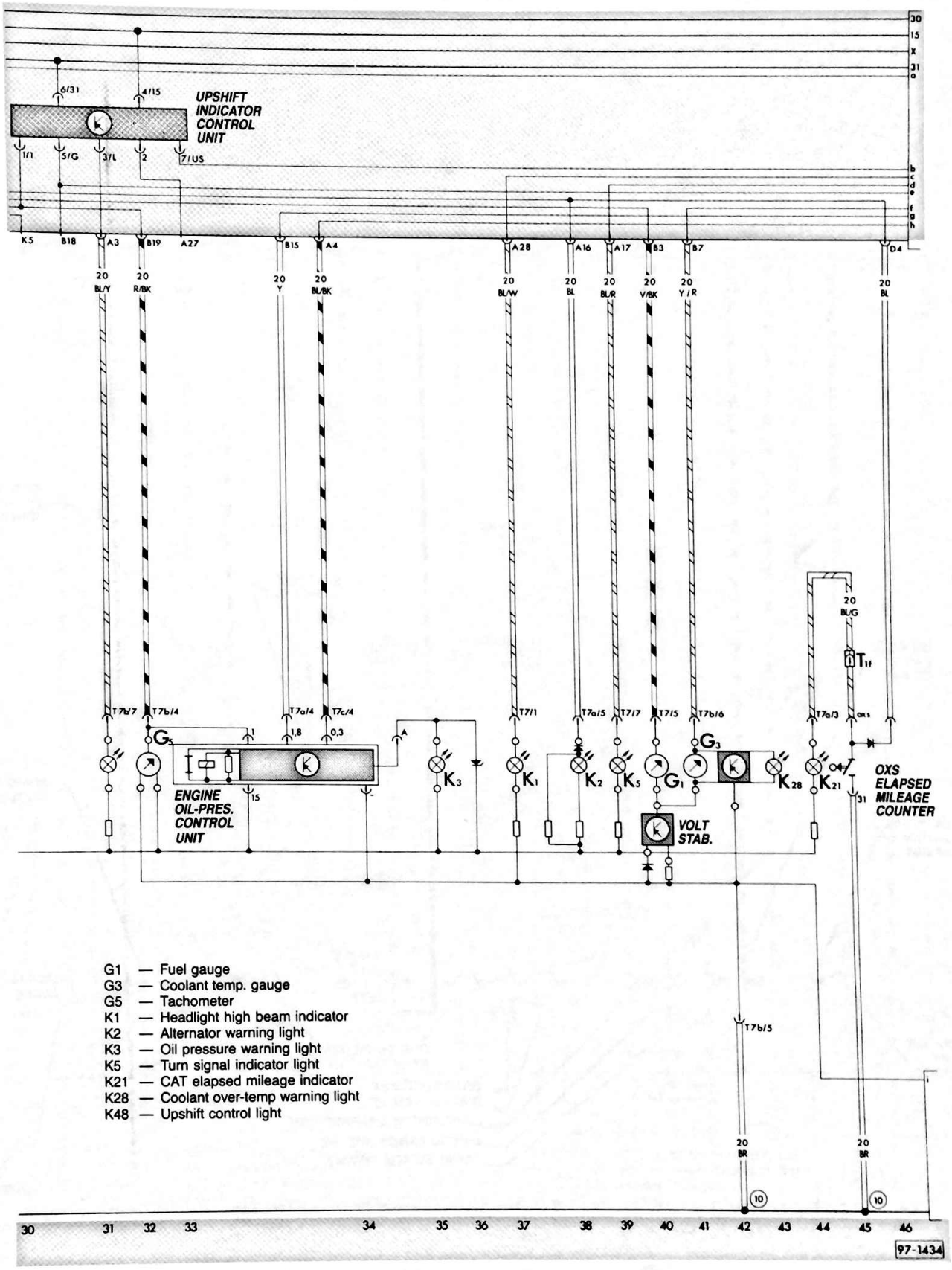
UPSHIFT INDICATOR CONTROL UNIT
ENGINE OIL-PRES. CONTROL UNIT
VOLT STAB.
OXS ELAPSED MILEAGE COUNTER
G1 — Fuel gauge
G3 — Coolant temp. gauge
G5 — Tachometer
K1 — Headlight high beam indicator
K2 — Alternator warning light
K3 — Oil pressure warning light
K5 — Turn signal indicator light
K21 — CAT elapsed mileage indicator
K28 — Coolant over-temp warning light
K48 — Upshift control light
97-1434

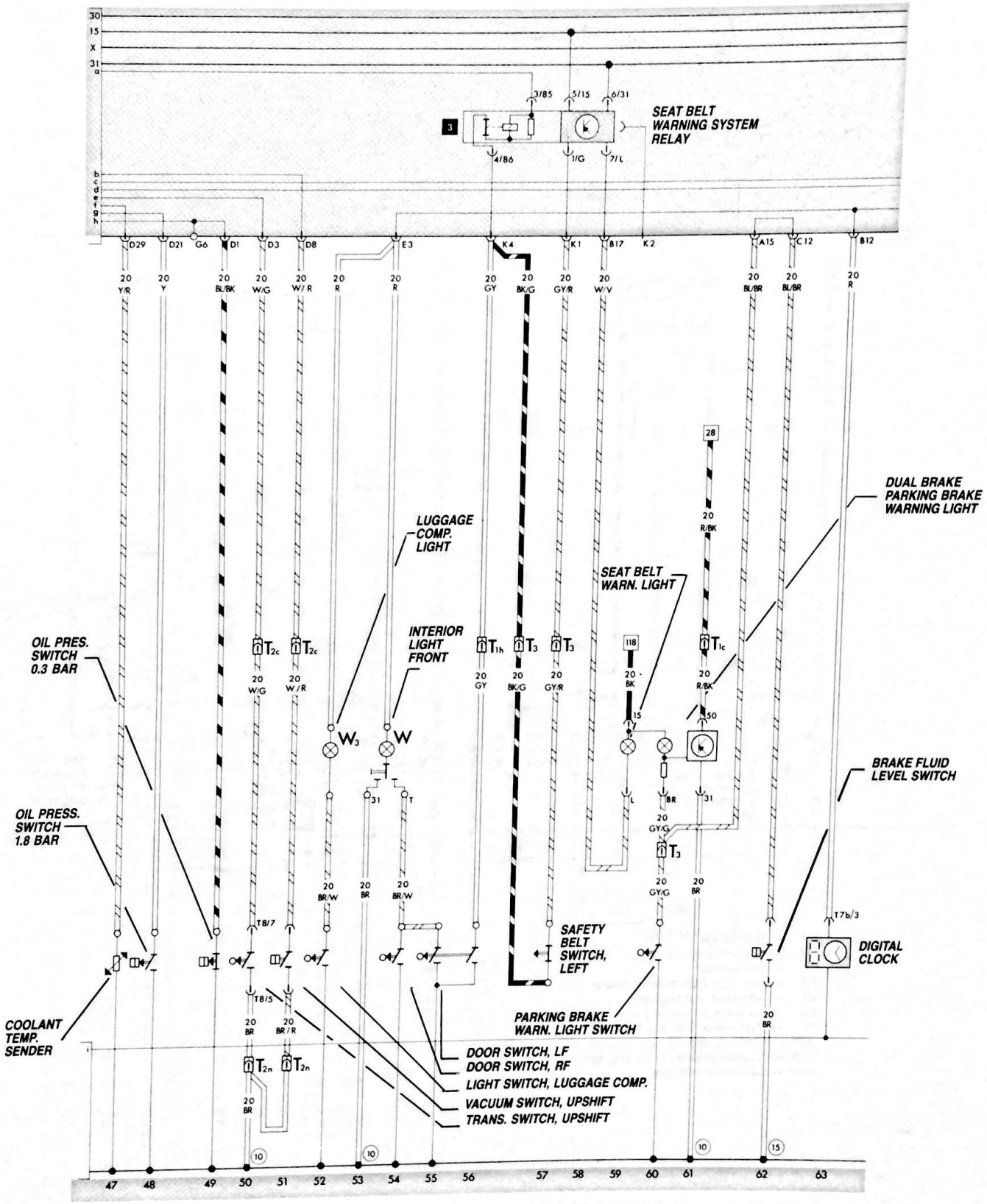
SEAT BELT WARNING SYSTEM RELAY
LUGGAGE COMP. LIGHT
INTERIOR LIGHT FRONT
SEAT BELT WARN. LIGHT
DUAL BRAKE PARKING BRAKE WARNING LIGHT
OIL PRES. SWITCH 0.3 BAR
OIL PRESS. SWITCH 1.8 BAR
BRAKE FLUID LEVEL SWITCH
SAFETY BELT SWITCH, LEFT
DIGITAL CLOCK
COOLANT TEMP. SENDER
PARKING BRAKE WARN. LIGHT SWITCH
DOOR SWITCH, LF
DOOR SWITCH, RF
LIGHT SWITCH, LUGGAGE COMP.
VACUUM SWITCH, UPSHIFT
TRANS. SWITCH, UPSHIFT

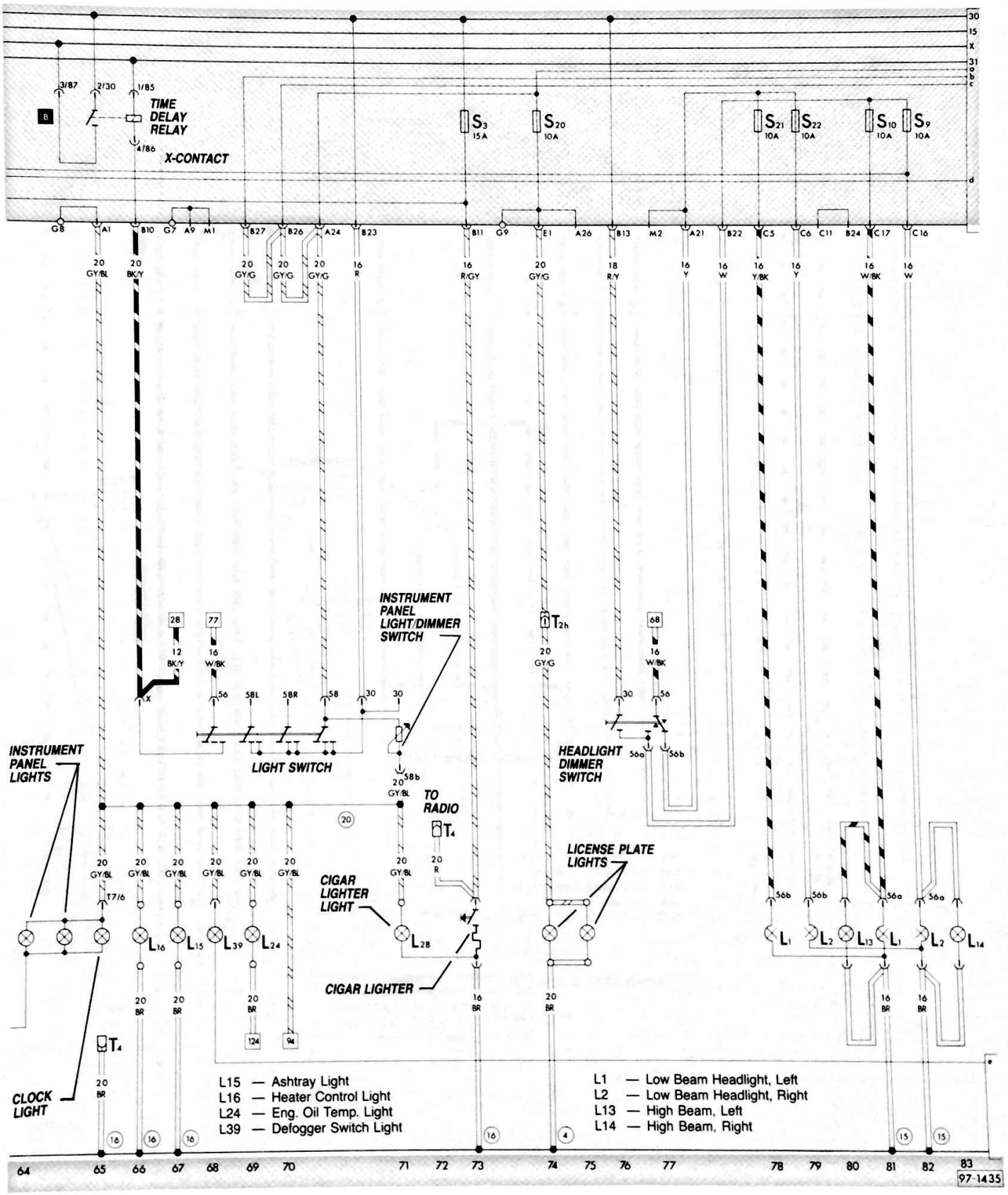
TIME DELAY RELAY
X-CONTACT
INSTRUMENT PANEL LIGHT/DIMMER SWITCH
LIGHT SWITCH
HEADLIGHT DIMMER SWITCH
INSTRUMENT PANEL LIGHTS
TO RADIO
LICENSE PLATE LIGHTS
CIGAR LIGHTER LIGHT
CIGAR LIGHTER
CLOCK LIGHT
L15 — Ashtray Light
L16 — Heater Control Light
L24 — Eng. Oil Temp. Light
L39 — Defogger Switch Light
L1 — Low Beam Headlight, Left
L2 — Low Beam Headlight, Right
L13 — High Beam, Left
L14 — High Beam, Right
97-1435

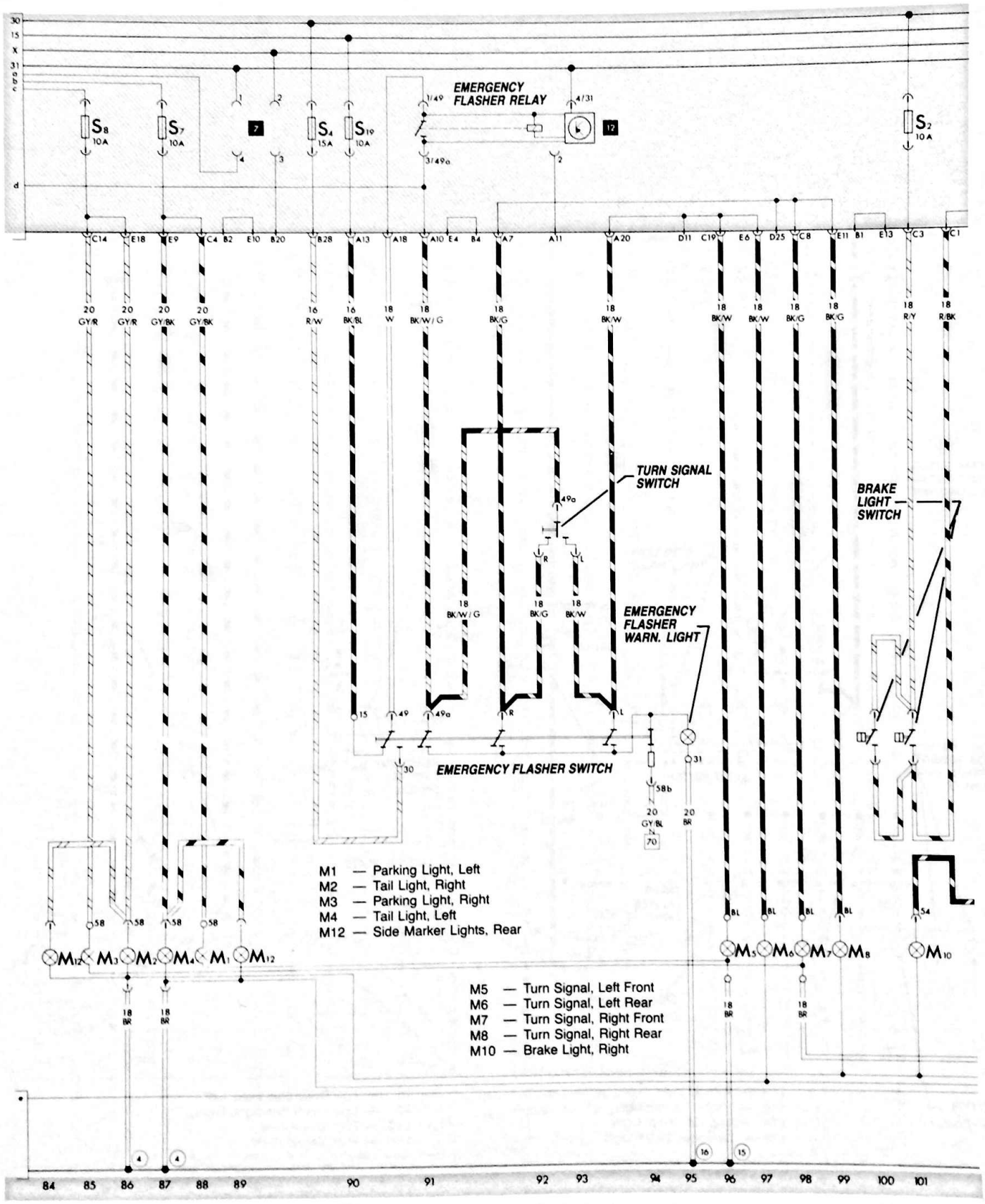
EMERGENCY FLASHER RELAY
TURN SIGNAL SWITCH
BRAKE LIGHT SWITCH
EMERGENCY FLASHER WARN. LIGHT
EMERGENCY FLASHER SWITCH
M1 — Parking Light, Left
M2 — Tail Light, Right
M3 — Parking Light, Right
M4 — Tail Light, Left
M12 — Side Marker Lights, Rear
M5 — Turn Signal, Left Front
M6 — Turn Signal, Left Rear
M7 — Turn Signal, Right Front
M8 — Turn Signal, Right Rear
M10 — Brake Light, Right

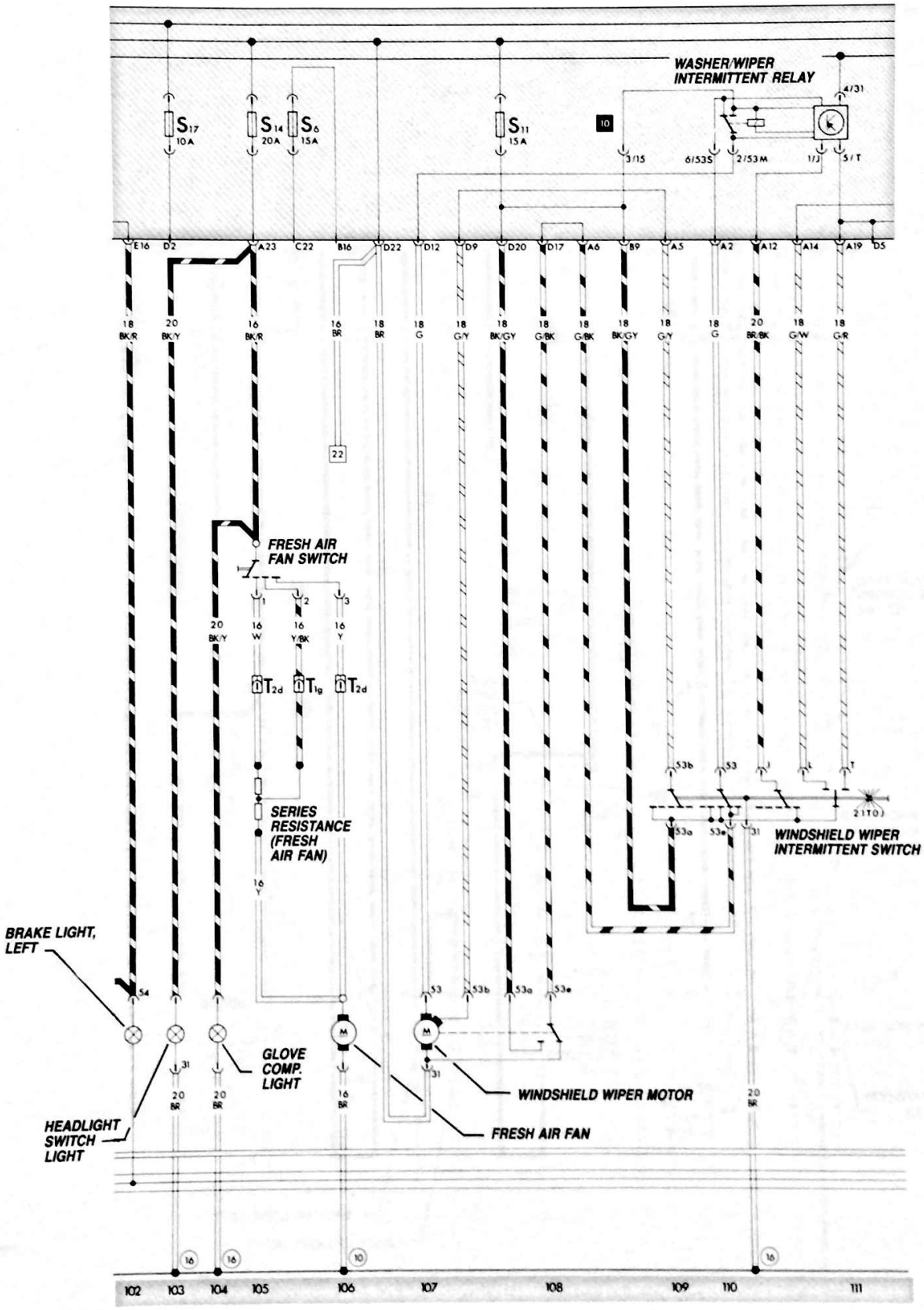
WASHER/WIPER INTERMITTENT RELAY
S17 10A
S14 20A
S6 15A
S11 15A
FRESH AIR FAN SWITCH
SERIES RESISTANCE (FRESH AIR FAN)
WINDSHIELD WIPER INTERMITTENT SWITCH
BRAKE LIGHT, LEFT
GLOVE COMP. LIGHT
HEADLIGHT SWITCH LIGHT
WINDSHIELD WIPER MOTOR
FRESH AIR FAN

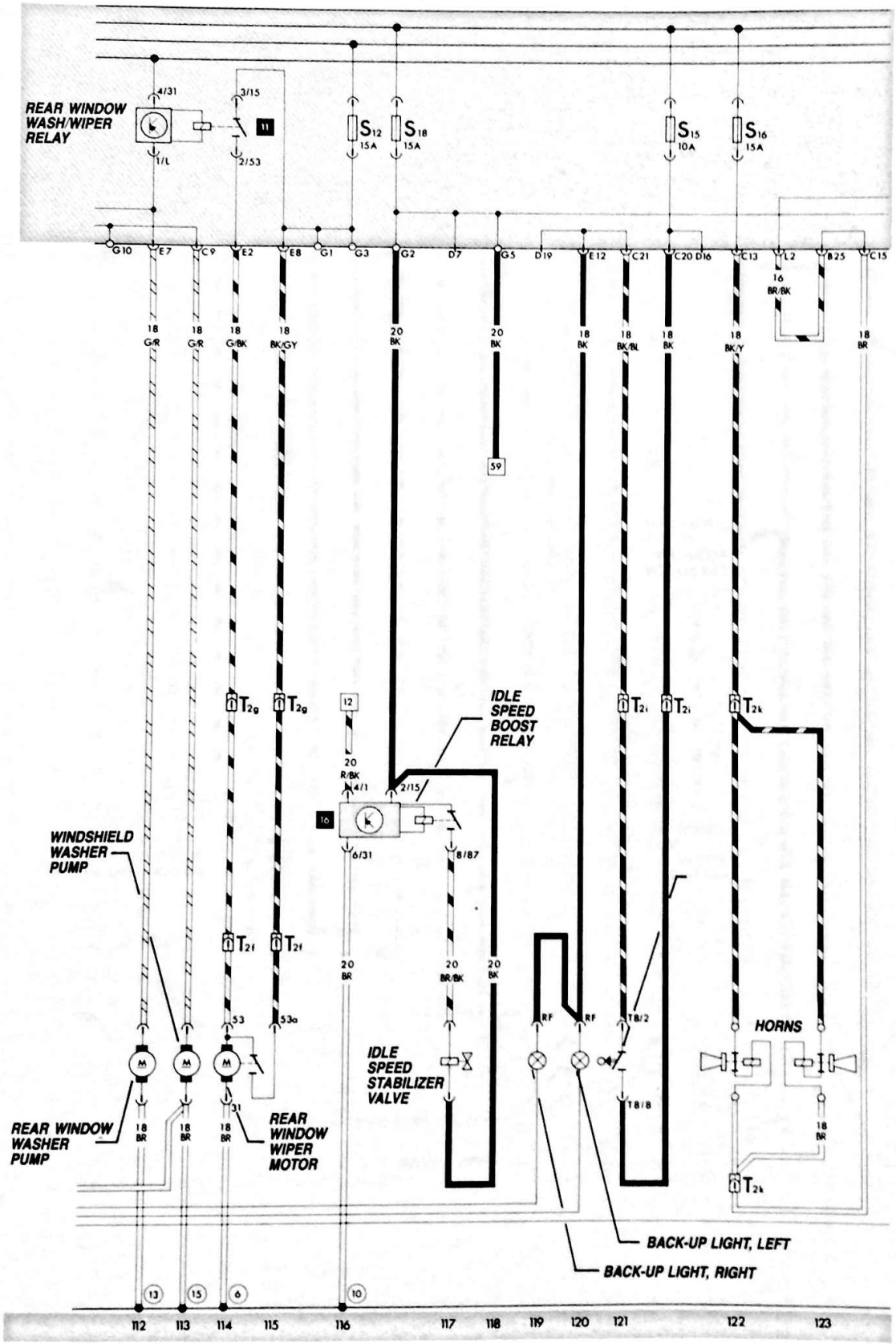
REAR WINDOW WASH/WIPER RELAY
4/31
3/15
1/L
2/53
11
S12 15A
S18 15A
S15 10A
S16 15A
G10
E7
C9
E2
E8
G1
G3
G2
D7
G5
D19
E12
C21
C20
D16
C13
L2
B25
C15
16 BR/BK
18 G/R
18 G/R
18 G/BK
18 BK/GY
20 BK
20 BK
18 BK
18 BK/BL
18 BK
18 BK/Y
18 BR
59
T2g
T2g
12
20 R/BK
4/1
2/15
IDLE SPEED BOOST RELAY
16
6/31
8/87
WINDSHIELD WASHER PUMP
T2f
T2f
20 BR
20 BR/BK
20 BK
53
53a
RF
RF
T8/2
T8/8
HORNS
IDLE SPEED STABILIZER VALVE
M
M
M
31
REAR WINDOW WASHER PUMP
18 BR
18 BR
18 BR
REAR WINDOW WIPER MOTOR
18 BR
T2k
BACK-UP LIGHT, LEFT
BACK-UP LIGHT, RIGHT
13
15
6
10
112
113
114
115
116
117
118
119
120
121
122
123

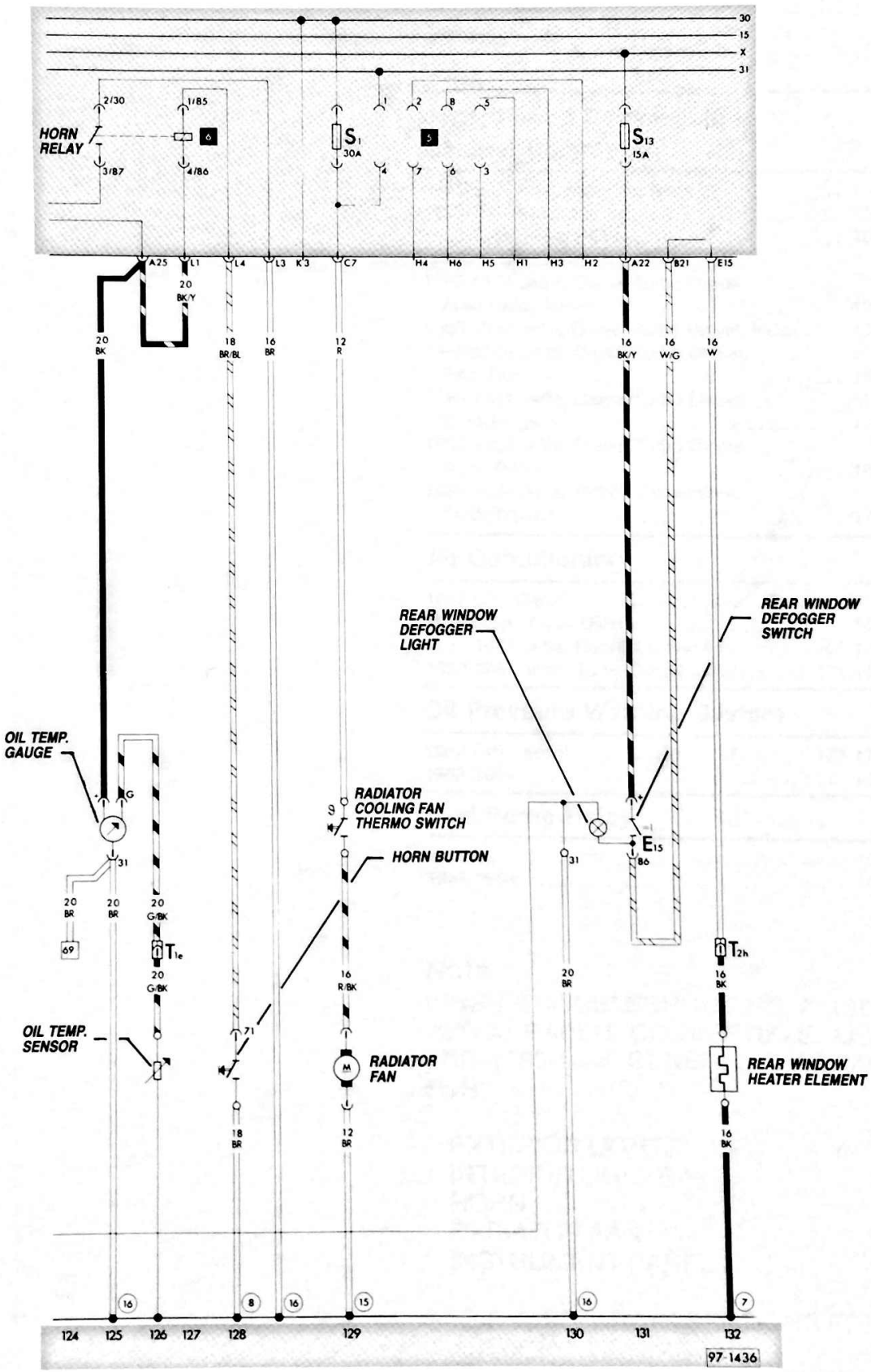
30
15
X
31
HORN RELAY
2/30
1/85
3/87
4/86
6
S1
30A
5
S13
15A
A25
L1
L4
L3
K3
C7
H4
H6
H5
H1
H3
H2
A22
B21
E15
20 BK/Y
20 BK
18 BR/BL
16 BR
12 R
16 BK/Y
16 W/G
16 W
REAR WINDOW DEFOGGER LIGHT
REAR WINDOW DEFOGGER SWITCH
OIL TEMP. GAUGE
G
31
20 BR
20 BR
20 G/BK
69
T1e
20 G/BK
OIL TEMP. SENSOR
RADIATOR COOLING FAN THERMO SWITCH
HORN BUTTON
16 R/BK
71
RADIATOR FAN
18 BR
12 BR
31
E15
86
20 BR
T2h
16 BK
REAR WINDOW HEATER ELEMENT
16 BK
16
8
16
15
16
7
124
125
126
127
128
129
130
131
132
97-1436

Jetta, Rabbit Convertible — General Diagrams

1983-1984 Fuse/Relay Panel 157
1983-1984 Index 158
1983-1984 General Diagram 159

1983-1984 Jetta, Diesel/Turbo Diesel, Fuse/Relay Panel 175
1983-1984 Jetta, Diesel/Turbo Diesel, Index 176
1983-1984 Jetta, Diesel/Turbo Diesel, Rad. Fan 177
1983-1984 Jetta, Diesel/Turbo Diesel, Glow Plugs 178
1983-1984 Jetta, Diesel/Turbo Diesel, Auto. Trans. 180
1982-1984 Jetta, Rabbit Convertible, Auto. Trans. 179

Air Conditioning

1982 CIS, Diesel 167
1982 Jetta, Turbo Diesel 168
1983-1984 Jetta, Rabbit Convertible 169-170
1983-1984 Jetta, Turbo Diesel 171-172

Oil Pressure Warning System

1982 CIS, Diesel 173-174
1983-1984 160

Fuel Pump Relay

1982 166
1983-1984 159

Note

WHEN TROUBLESHOOTING A 1982 JETTA, RABBIT CONVERTIBLE, USE THE 1983-1984 GENERAL DIAGRAM FOR:

EXTERIOR LIGHTS
INTERIOR LIGHTS
HORN
RADIATOR FAN
INSTRUMENT PANEL

SEE THE SEPARATE SECTIONS FOR:
AIR CONDITIONING
OIL PRESSURE WARNING SYSTEM
FUEL PUMP RELAY

Jetta/Rabbit Convertible
1983-1984

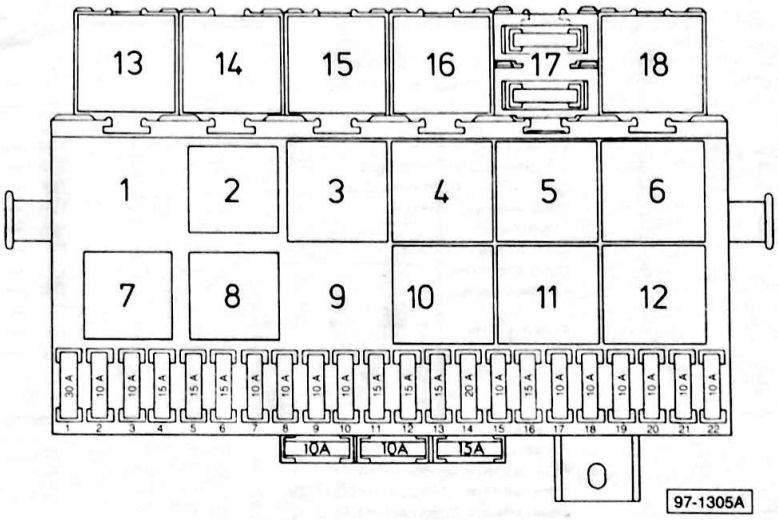

Fuse/Relay Panel

Relay Locations On Fuse/Relay Panel

1 — open position
2 — fuel pump
3 — seat belt warning
4 — shift indicator control unit
5 — open position
6 — dual horn
7 — open position
8 — load reduction
9 — open position
10 — intermittent wiper
11 — open position
12 — emergency flasher
13 — open position
14 — open position
15 — open position
16 — open position
17 — open position
18 — open position

	Fuses	
	Rating	**Color**
S_1	— 30A	green
S_2, S_3	— 10A	red
S_4—S_6	— 15A	blue
S_7—S_{10}	— 10A	red
S_{11}—S_{13}	— 15A	blue
S_{14}	— 20A	yellow
S_{15}	— 10A	red
S_{16}	— 15A	blue
S_{17}—S_{22}	— 10A	red

Description	Current Track
Alternator	1.2
Alternator warning light	39
Auxiliary air regulator	21
Back-up light, left	115
Back-up light, right	114
Back-up light switch	115
Battery	4
Brake light, left	100
Brake light, right	99
Brake light switch	98, 99
Brake system warning switch	57
C.A.T. warning light	45
Cigarette lighter	73
Cigarette lighter light	70
Clock light	69
Cold starting valve	25
Common ground connector	21-23
Control pressure regulator	20
Coolant indicator control unit	111, 112
Coolant low level warning switch	112
Coolant temperature gauge	42
Coolant temperature sending unit	59
Coolant temperature warning light (overheating red)	44
Defogger cut-out relay (X-contact)	63, 64
Door contact/buzzer switch, left	51, 52
Door contact switch, front right	50
Dual brake & parking brake warning light	55
Electric fuel pump	23
Emergency flasher relay	89, 90
Emergency flasher switch	88-91
Emergency flasher warning light	93
Engine oil pressure control unit	33, 34
Engine oil pressure switch (1.8 bar)	60
Fresh air blower series resistance	102
Fresh air fan	103
Fresh air fan switch	102
Fuel gauge	41
Fuel gauge sending unit	24
Fuel-injection system power supply relay	17-19
Fuel pump relay	19-23
Fuses (S1-S20, S22) on fuse/relay panel	
Hall generator	9, 10
Headlight dimmer/flasher switch	76
Headlight high beam warning light	38
Headlight, left	77, 80
Headlight, right	78, 81
Headlight switch light	101
High beam, left	79
High beam, right	82
Horn button	120
Horn, dual	116
Horn relay, dual horn	118-120

Description	Current Track
Ignition coil	12
Ignition distributor	11-13
Ignition/starter switch	27-29
Interior light, front	49
Instrument panel light	67, 68
Instrument panel light switch/dimmer	70
License plate light	74-75
Light switch	64-70
Luggage compartment light	48
Luggage compartment light switch	48
Oil pressure switch	34
Oil pressure warning light	36
OXS/AFC-system control unit	14-18
OXS elapsed mileage odometer	46
OXS frequency valve*	18
OXS thermoswitch*	15
Oxygen sensor*	16
Parking light, left	86
Parking light, right	83
Parking brake warning light switch	55
Radiator fan	121
Radio connection	72
Rear window defogger switch	124
Rear window defogger switch light	122
Rear window defogger warning light	123
Rear window heater element	125
Seat belt buzzer contact, left	53
Seat belt system warning light	54
Seat belt warning system relay	52-54
Shift indicator	30
Shift indicator switch	61
Spark plugs	11-13
Spark plug connectors	11-13
Starter	5-7
Tachometer	32
Tail light, left	85
Tail light, right	84
Thermo time switch	27
Transistorized ignition control unit	8-11
Turn signal light, front left	94
Turn signal light, front right	96
Turn signal light, rear left	95
Turn signal light, rear right	97
Turn signal switch	90
Turn signal warning light	40
Up-shift control light	31
Up-shift indicator control unit	30-33
Up-shift/indicator solenoid shut-off	30
Vacuum switch/up-shift indicator	62
Voltage regulator	1, 2
Voltage stabilizer	41
Washer/wiper intermittent relay	107-109
Windshield washer pump	110
Windshield-wiper intermittent switch	107-109
Windshield wiper motor	105-106

Wire Connectors

T1 — single, engine compartment
T1a — single, on battery (+)
T1b — single, behind fuse/relay plate
T1c — single, behind dashboard
T1d — single, behind dashboard
T1e — single, behind fuse/relay panel
T1g — single, behind fuse/relay panel
T1h — single, engine compartment, left
T1i — single, behind dashboard
T1k — single, next to battery
T2 — double, behind dashboard
T2a — double, behind dashboard
T2b — double, behind fuse/relay panel
T2c — double, engine compartment, left
T2d — double, behind dashboard
T2e — double, engine compartment, left
T2f — double, luggage compartment, left
T2g — double, next to dual horn
T2h — double, next to dual horn
T3 — three-point, behind fuse/relay panel
T4 — four-point, behind dashboard
T4a — four-point, engine compartment
T6 — six-point, on dashboard cluster
T8 — eight-point, on transmission
T14 — fourteen-point, on dashboard cluster

Ground Connectors

(1) — battery/body/transmission
(8) — on cold start valve
(10) — on-fuse/relay panel
(13) — steering gear
(14) — roof member center
(15) — on wiring harness front
(16) — in dashboard wiring harness (wrapped with tape)
(18) — rear panel

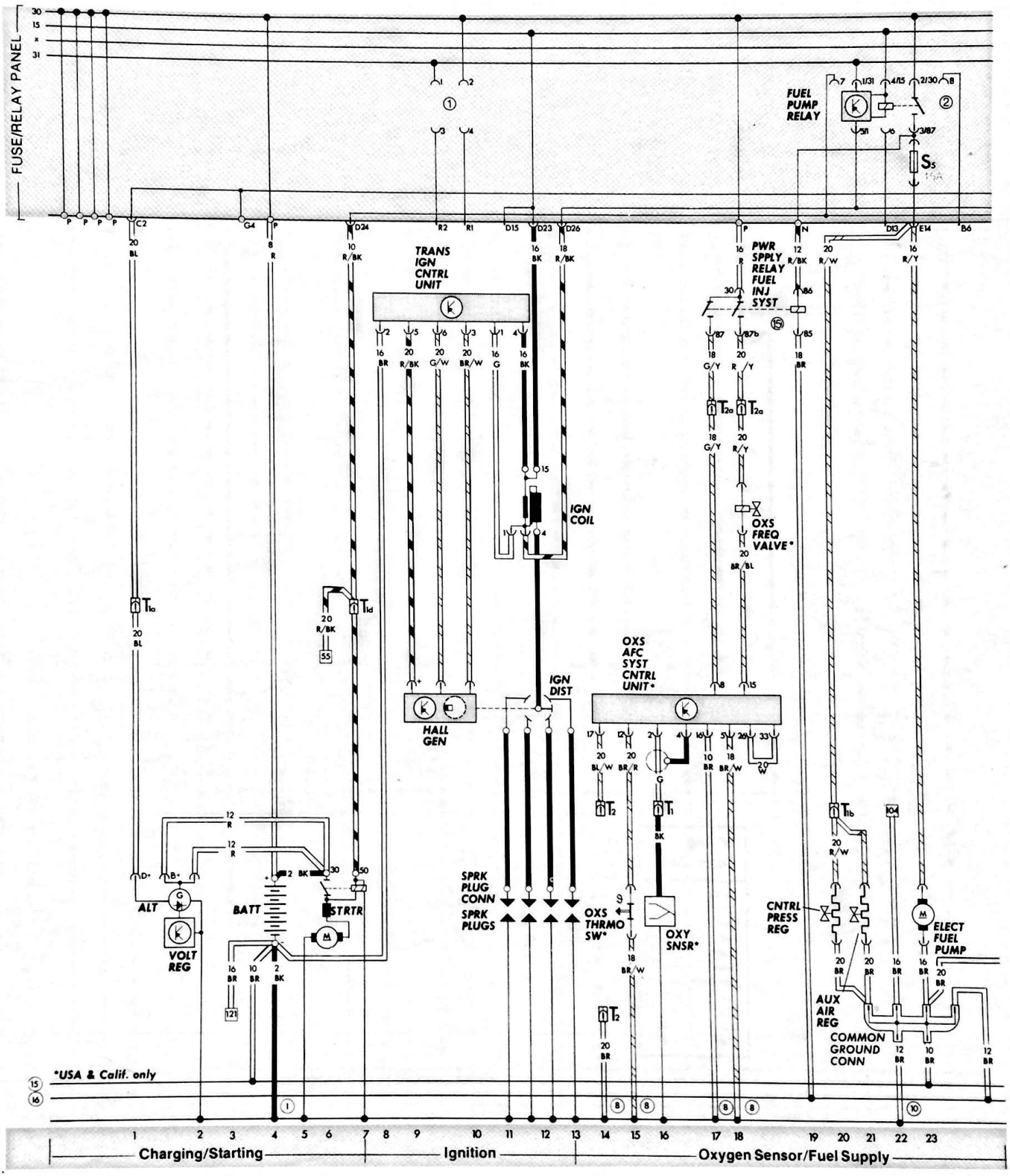
FUSE/RELAY PANEL
FUEL PUMP RELAY
TRANS IGN CNTRL UNIT
PWR SPPLY RELAY FUEL INJ SYST
IGN COIL
OXS FREQ VALVE*
OXS AFC SYST CNTRL UNIT*
IGN DIST
HALL GEN
SPRK PLUG CONN
SPRK PLUGS
OXS THRMO SW*
OXY SNSR*
CNTRL PRESS REG
ELECT FUEL PUMP
AUX AIR REG
COMMON GROUND CONN
ALT
VOLT REG
BATT
STRTR
*USA & Calif. only
Charging/Starting
Ignition
Oxygen Sensor/Fuel Supply

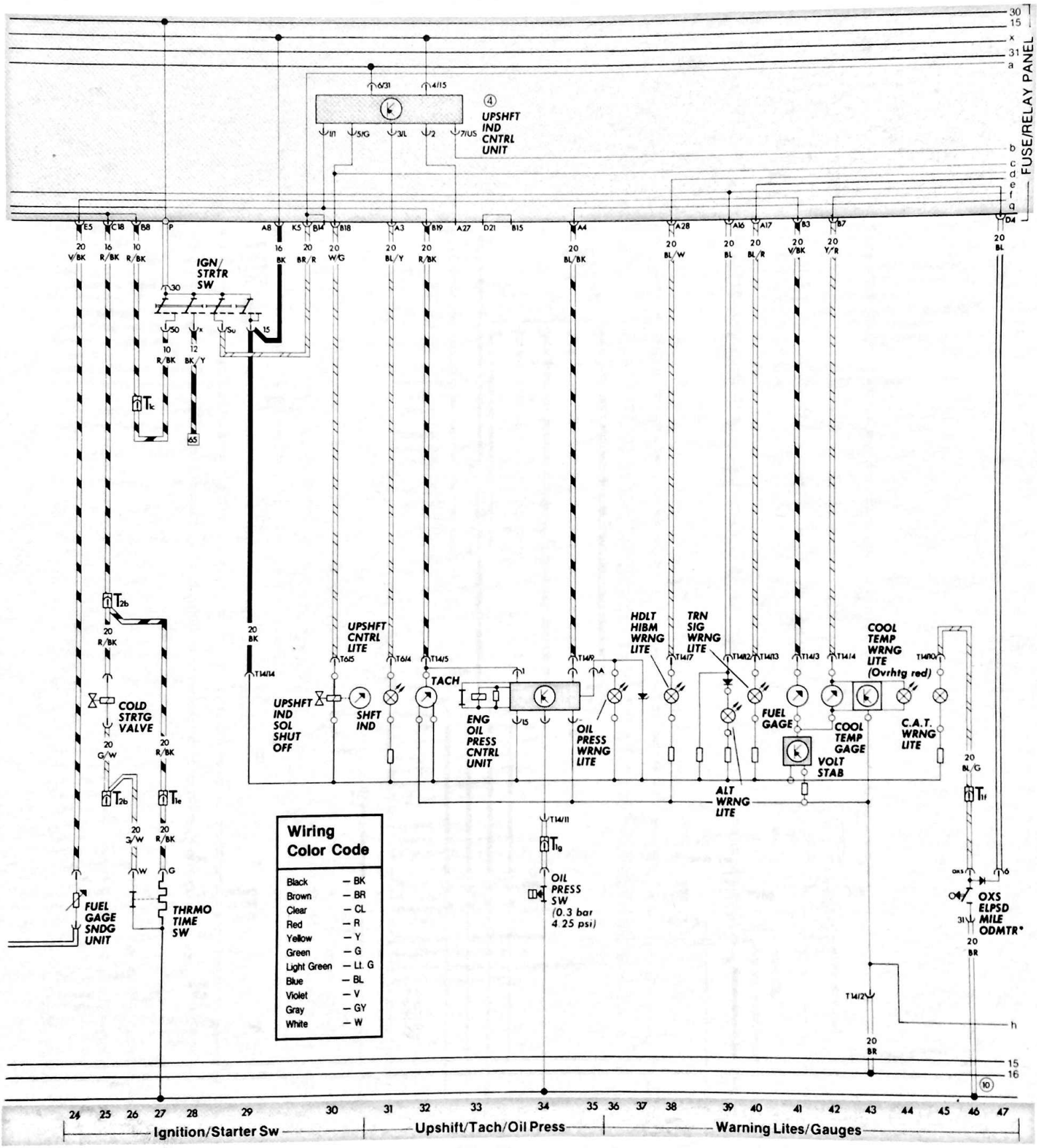
FUSE/RELAY PANEL
UPSHFT IND CNTRL UNIT
IGN/ STRTR SW
COLD STRTG VALVE
FUEL GAGE SNDG UNIT
THRMO TIME SW
UPSHFT CNTRL LITE
UPSHFT IND SOL SHUT OFF
SHFT IND
TACH
ENG OIL PRESS CNTRL UNIT
OIL PRESS WRNG LITE
OIL PRESS SW (0.3 bar 4.25 psi)
HDLT HIBM WRNG LITE
TRN SIG WRNG LITE
FUEL GAGE
COOL TEMP GAGE
VOLT STAB
ALT WRNG LITE
COOL TEMP WRNG LITE (Ovrhtg red)
C.A.T. WRNG LITE
OXS ELPSD MILE ODMTR*
Wiring Color Code
Black — BK
Brown — BR
Clear — CL
Red — R
Yellow — Y
Green — G
Light Green — Lt. G
Blue — BL
Violet — V
Gray — GY
White — W
Ignition/Starter Sw
Upshift/Tach/Oil Press
Warning Lites/Gauges

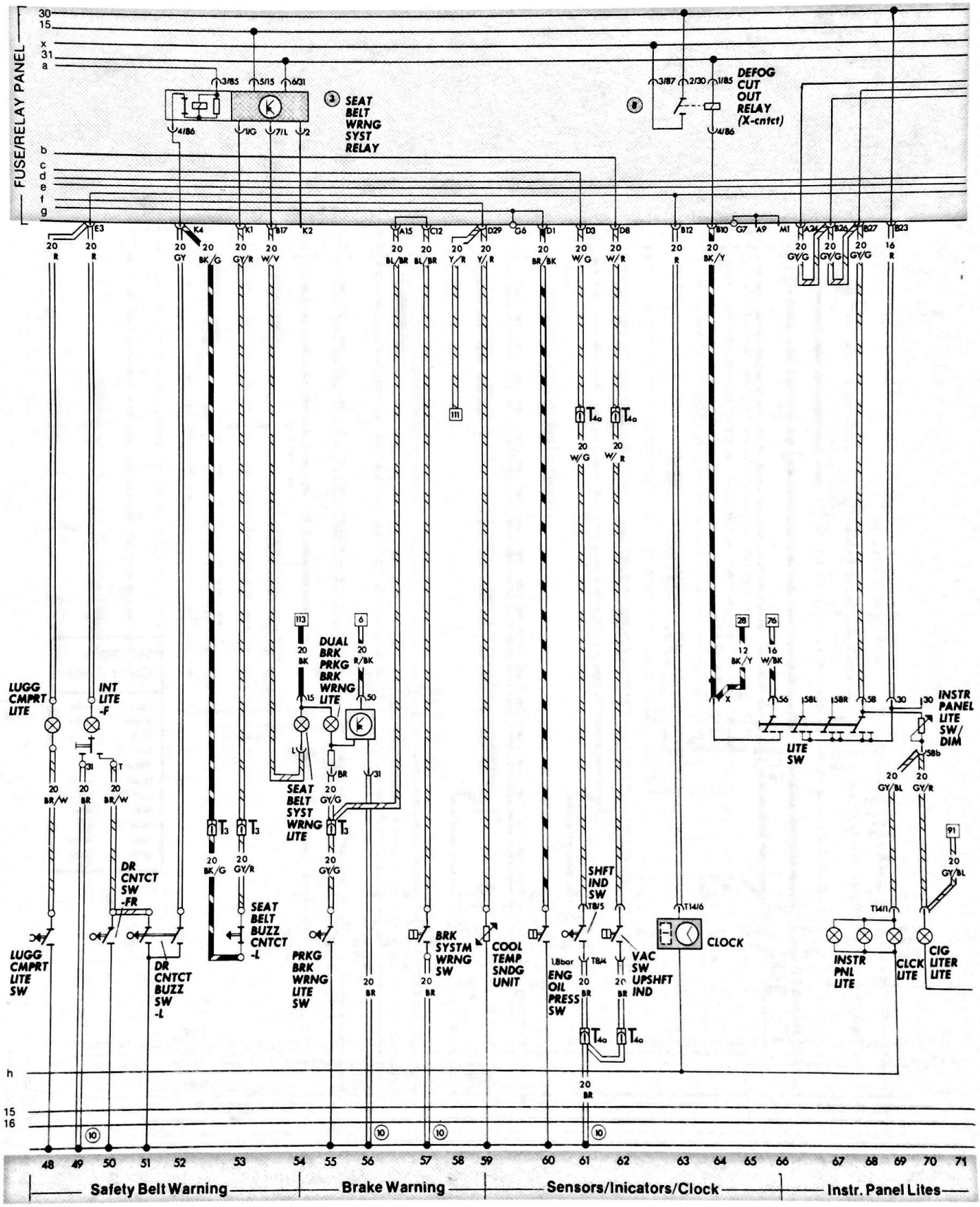
FUSE/RELAY PANEL
SEAT BELT WRNG SYST RELAY
DEFOG CUT OUT RELAY (X-cntct)
LUGG CMPRT LITE
INT LITE -F
DUAL BRK PRKG BRK WRNG LITE
SEAT BELT SYST WRNG LITE
DR CNTCT SW -FR
SEAT BELT BUZZ CNTCT -L
LUGG CMPRT LITE SW
DR CNTCT BUZZ SW -L
PRKG BRK WRNG LITE SW
BRK SYSTM WRNG SW
COOL TEMP SNDG UNIT
SHFT IND SW
ENG OIL PRESS SW
VAC SW UPSHFT IND
CLOCK
LITE SW
INSTR PANEL LITE SW/ DIM
INSTR PNL LITE
CLCK LITE
CIG LITER LITE
Safety Belt Warning
Brake Warning
Sensors/Inicators/Clock
Instr. Panel Lites

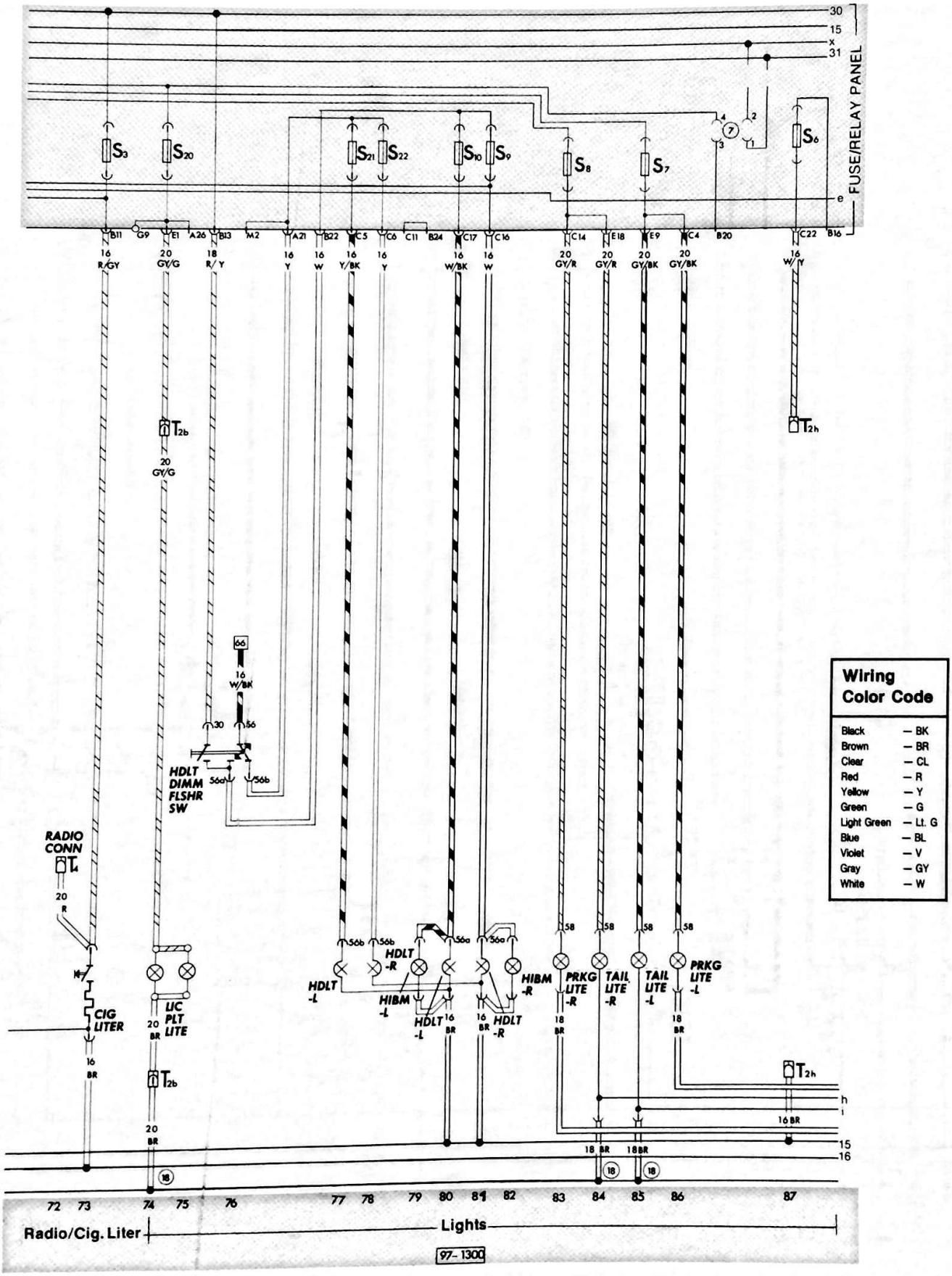

Wiring Color Code

Black	— BK
Brown	— BR
Clear	— CL
Red	— R
Yellow	— Y
Green	— G
Light Green	— Lt. G
Blue	— BL
Violet	— V
Gray	— GY
White	— W

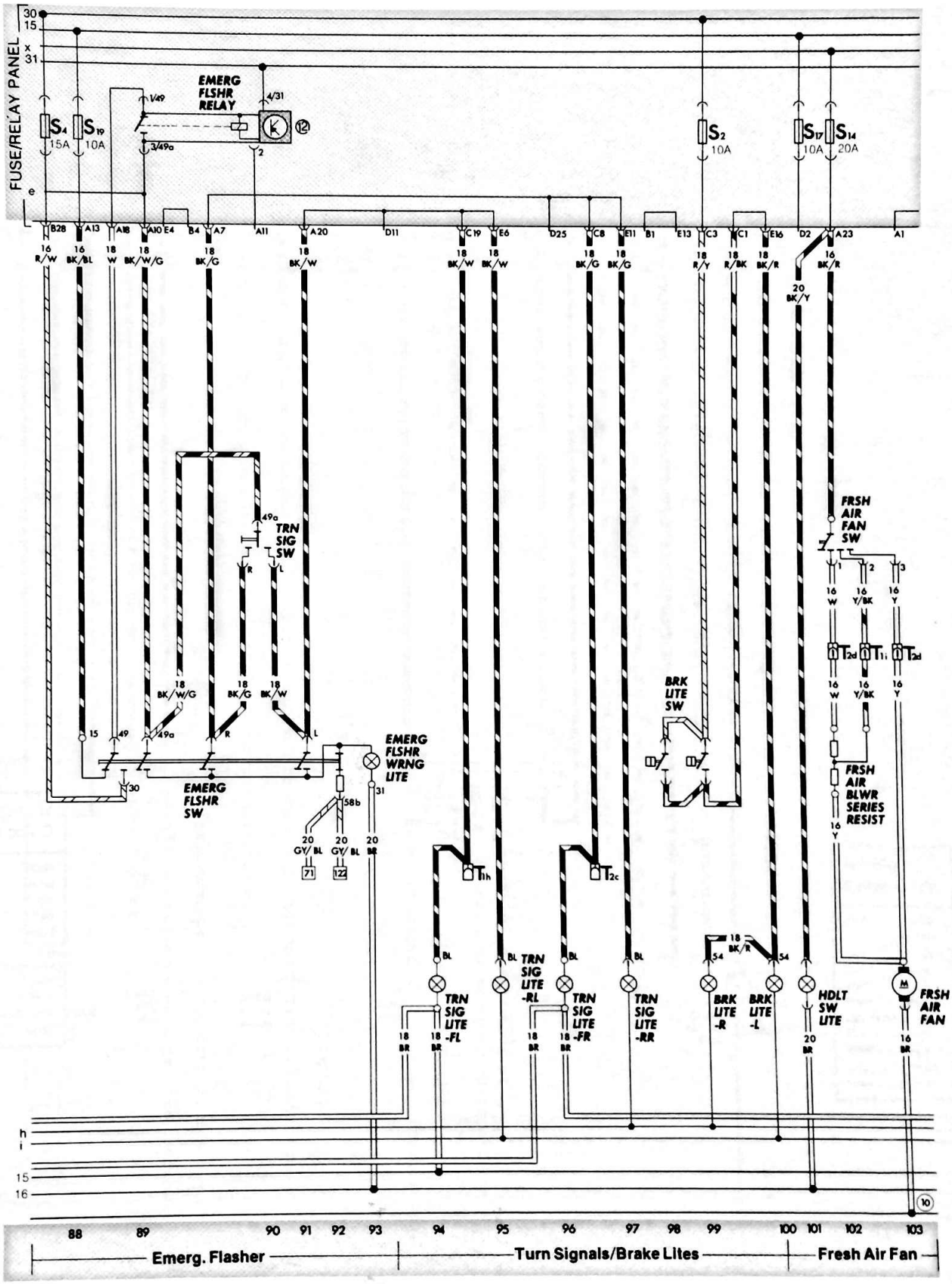
FUSE/RELAY PANEL
30
15
x
31
e
EMERG FLSHR RELAY
S4 15A
S19 10A
S2 10A
S17 10A
S14 20A
TRN SIG SW
EMERG FLSHR SW
EMERG FLSHR WRNG LITE
BRK LITE SW
FRSH AIR FAN SW
FRSH AIR BLWR SERIES RESIST
TRN SIG LITE -FL
TRN SIG LITE -RL
TRN SIG LITE -FR
TRN SIG LITE -RR
BRK LITE -R
BRK LITE -L
HDLT SW LITE
FRSH AIR FAN
Emerg. Flasher
Turn Signals/Brake Lites
Fresh Air Fan

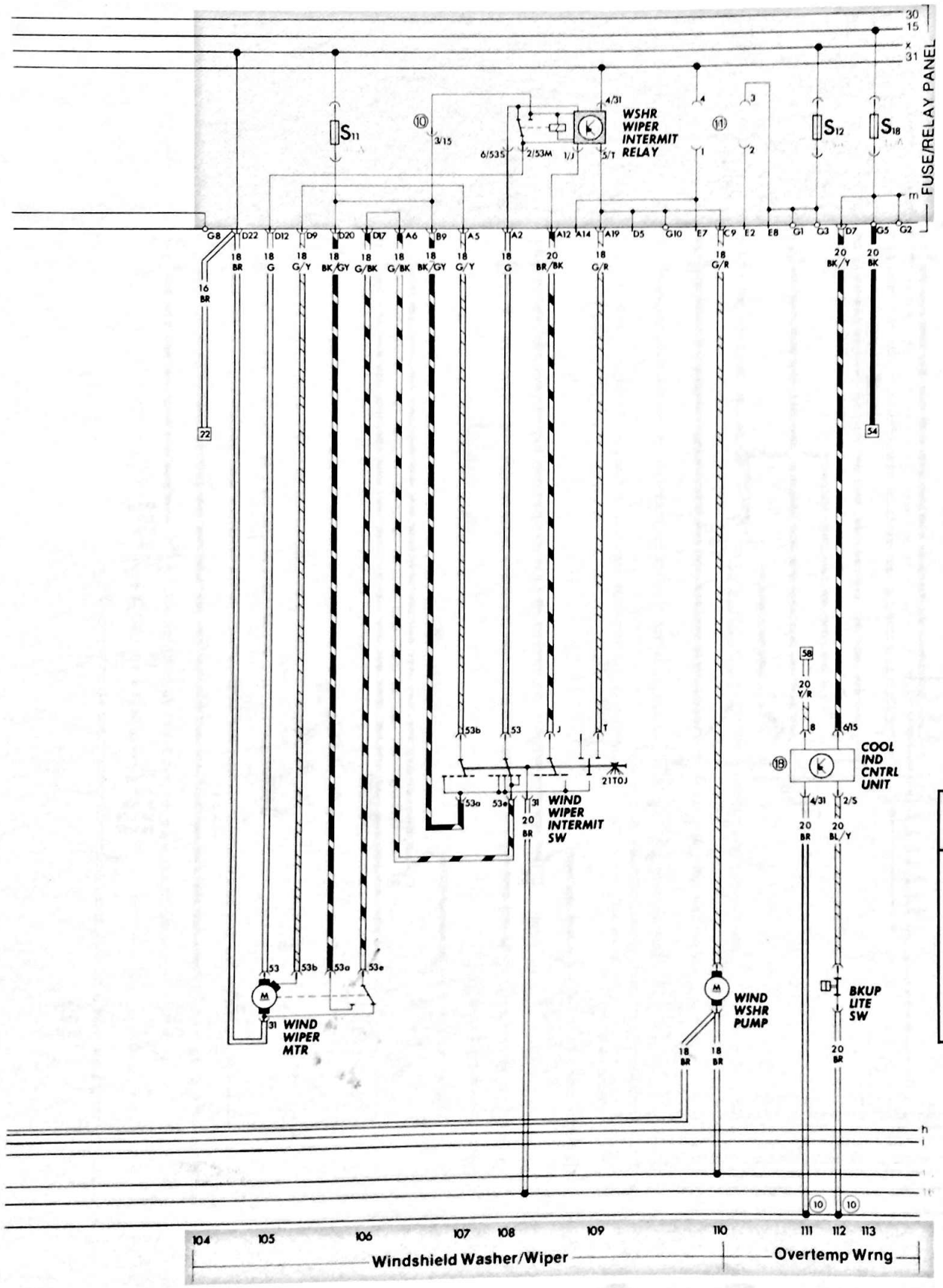

Wiring Color Code

Black	— BK
Brown	— BR
Clear	— CL
Red	— R
Yellow	— Y
Green	— G
Light Green	— Lt. G
Blue	— BL
Violet	— V
Gray	— GY
White	— W

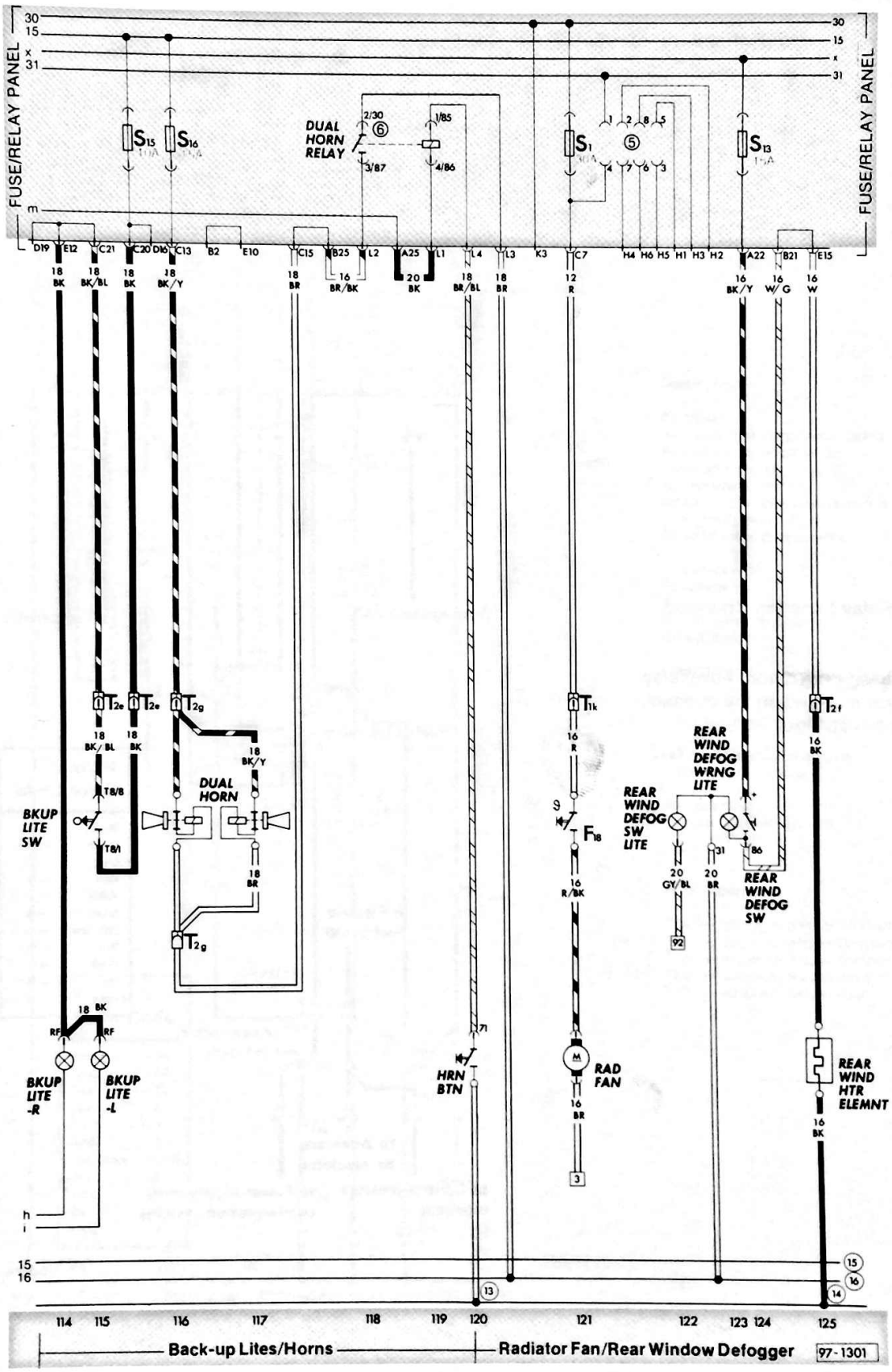

Wiring Color Code

Black	— BK
Brown	— BR
Clear	— CL
Red	— R
Yellow	— Y
Green	— G
Light Green	— Lt. G
Blue	— BL
Violet	— V
Gray	— GY
White	— W

Jetta Convertible Scirocco	1982

Electric Fuel Pump Relay Location Changed

Fuel-pump relay has been moved from Fuse/relay panel to auxiliary socket mounted on top of panel. Circuit shown reflects this change.

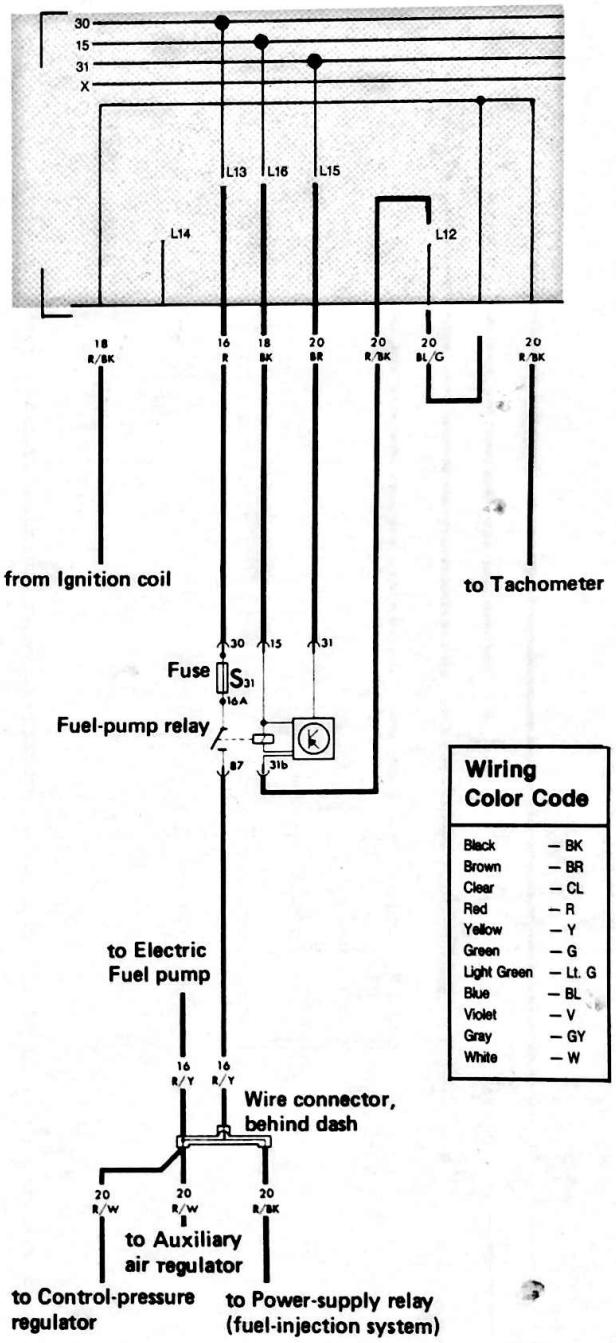

Wiring Color Code

Black	— BK
Brown	— BR
Clear	— CL
Red	— R
Yellow	— Y
Green	— G
Light Green	— Lt. G
Blue	— BL
Violet	— V
Gray	— GY
White	— W

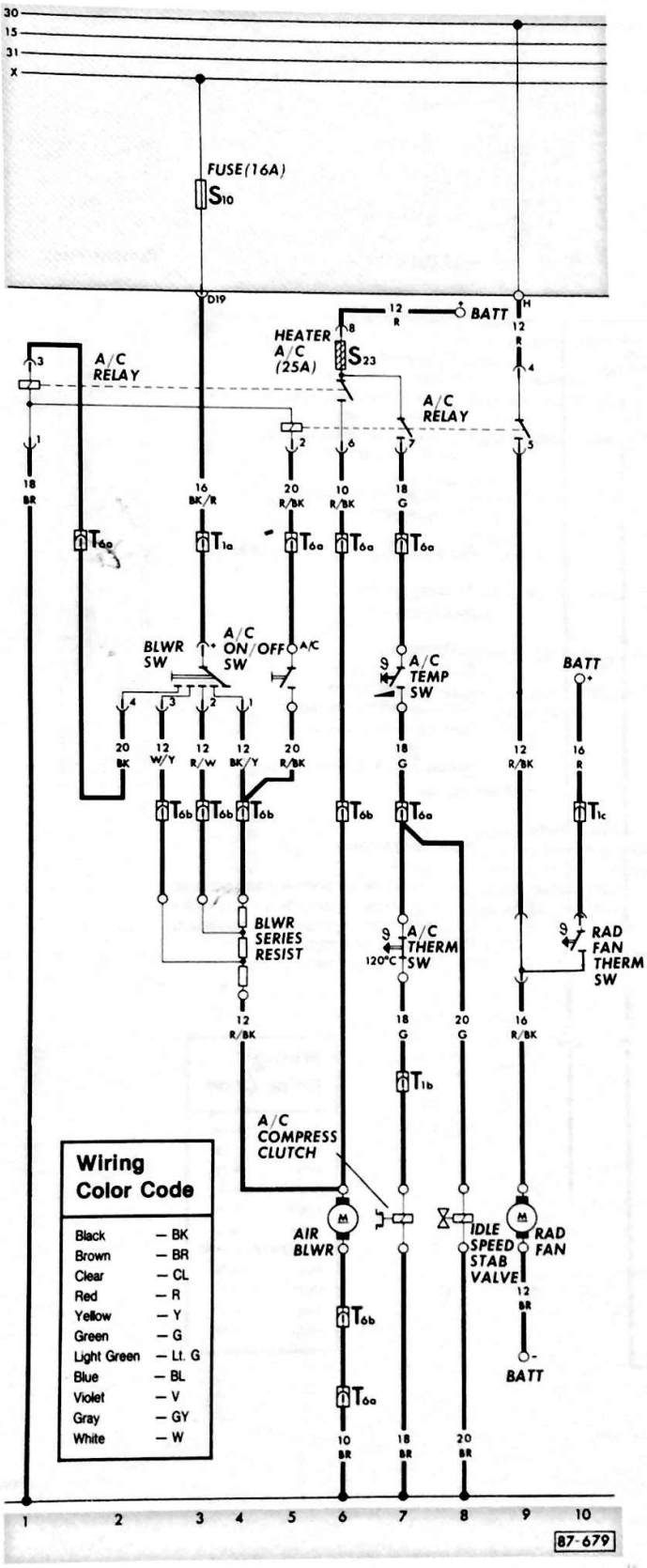

Description	Current Track
Air blower	6
Air conditioner compressor clutch	7
Air conditioner on/off switch (on upper lever)	5
Air conditioner relay	1-9
Air conditioner temperature switch (on lower lever)	7
Air conditioner thermoswitch	7
To battery –	9
To battery +	8, 10
Blower series resistance	2-4
Blower switch	2-4
Fuse (16 amp)	3
Heater and A/C fuse (25A) (on top of A/C relay)	6
Idle-speed stabilization valve (cars with CIS only)	8
Radiator fan	9
Radiator fan thermoswitch	9, 10

Wire Connectors

T1a — single, in engine compartment
T1b — single, in engine compartment
T1c — single, in engine compartment
T6a — six-point, behind dash
T6b — six-point, behind dash

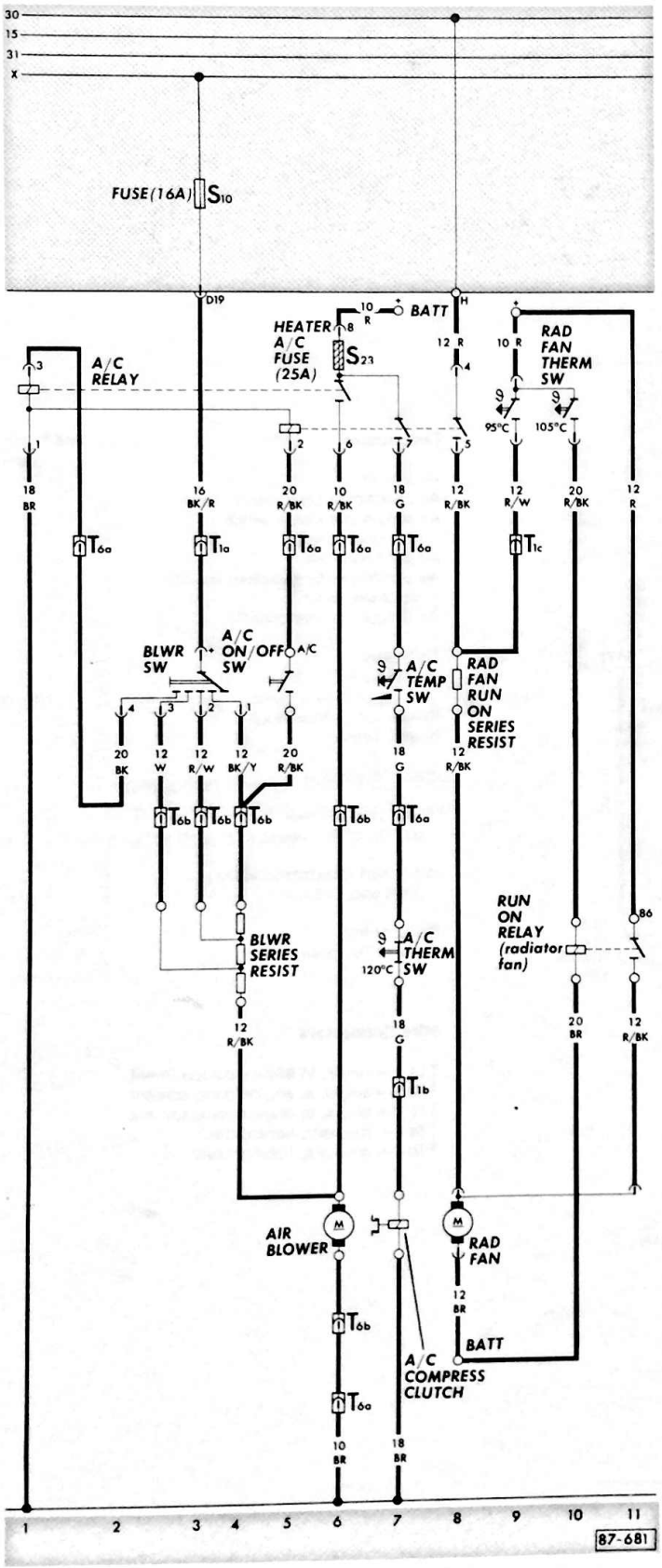

Description	Current Track
Air blower	6
Air conditioner compressor clutch	7
Air conditioner on/off switch (on upper lever)	5
Air conditioner relay	1-8
Air conditioner temperature switch (on lower lever)	7
Air conditioner thermoswitch (in coolant circuit)	7
Blower series resistance	2-4
Blower switch	2-4
Fuse on fuse/relay panel (16 amp)	4
To battery –	8
To battery +	7, 9
Radiator fan	8
Radiator fan run-on series resistance	8
Radiator fan thermoswitch	9, 10
Run-on relay (radiator fan)	10-11
Heater and A/C fuse (25 amp)	6

Wire Connectors

T1 — single, in engine compartment
T1 — single, in engine compartment
T1 — single, in engine compartment
T6 — six-point, behind dash
T6 — six-point, behind dash

Wiring Color Code

Black	– BK
Brown	– BR
Clear	– CL
Red	– R
Yellow	– Y
Green	– G
Light Green	– Lt. G
Blue	– BL
Violet	– V
Gray	– GY
White	– W

Description	Current Track
Air condtioner compressor clutch	8
Air condtioner relay	1-10
Air condtioner temperature switch (on lower lever)	8
Air condtioner thermoswitch*	8
Air conditioner switch, on upper lever	6
Idle speed stabilization valve**	9
Fresh-air fan	7
Fresh-air fan switch	2-5
Fuse	11
Main heater fuse, A/C	9
Radiator cooling fan thermoswitch	11
Radiator fan	11
Series resistance for fresh air blower	5

*In coolant circulation, cars with Diesel engine
**Cars with CIS engine

Wire Connectors

T1a — single, behind dash
T1b — single, in engine compartment
T1c — single, in engine compartment
T5 — 5-point, behind dash
T6 — 6-point, behind dash

CURRENT FLOW DIAGRAM →

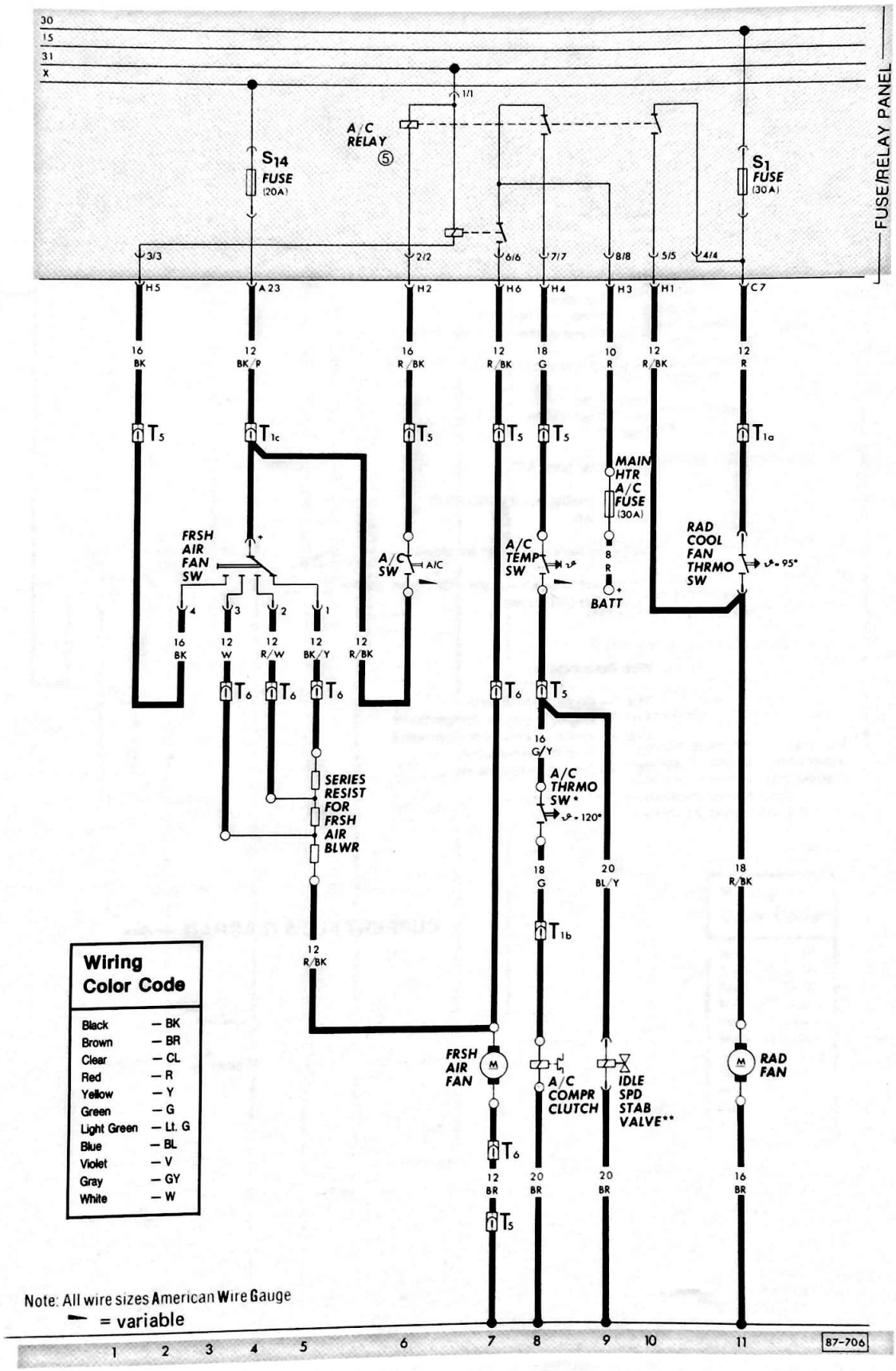
30
15
31
X
FUSE/RELAY PANEL
A/C RELAY
5
S14 FUSE (20A)
S1 FUSE (30A)
1/1
3/3
2/2
6/6
7/7
8/8
5/5
4/4
H5
A23
H2
H6
H4
H3
H1
C7
16 BK
12 BK/P
16 R/BK
12 R/BK
18 G
10 R
12 R/BK
12 R
T5
T1c
T5
T5
T5
T1a
MAIN HTR A/C FUSE (30A)
FRSH AIR FAN SW
A/C SW
A/C
A/C TEMP SW
RAD COOL FAN THRMO SW
95°
8 R
BATT
16 BK
12 W
12 R/W
12 BK/Y
12 R/BK
T6
T6
T6
T6
T5
16 G/Y
A/C THRMO SW*
120°
SERIES RESIST FOR FRSH AIR BLWR
18 G
20 BL/Y
18 R/BK
T1b
12 R/BK
Wiring Color Code
Black — BK
Brown — BR
Clear — CL
Red — R
Yellow — Y
Green — G
Light Green — Lt. G
Blue — BL
Violet — V
Gray — GY
White — W
FRSH AIR FAN
A/C COMPR CLUTCH
IDLE SPD STAB VALVE**
RAD FAN
T6
12 BR
20 BR
20 BR
16 BR
T5
Note: All wire sizes American Wire Gauge
= variable
1
2
3
4
5
6
7
8
9
10
11
87-706

Jetta

Description	Current Track
Air condtioner compressor clutch	8
Air condtioner thermoswitch in coolant circulation	8
Battery	8, 11
Fresh air fan	7
Fresh air fan switch	2-5
Fuse S_1	11
Fuse S_{14}	4
Fuse S_{42} for radiator fan (in engine compartment)	9
Main heater/A/C fuse S_{23}	9
Radiator fan	10
Radiator cooling fan thermoswitch	10, 11
Run-on relay, in engine compartment, left	9-11
Series resistance for fresh air blower	2-5
Series resistance for radiator fan afterrun	10

Wire Connectors

T1a — single, behind dash
T1b — single, in engine compartment
T1c — single, behind dash
T5 — 5-point, behind dash
T6 — 6-point, behind dash

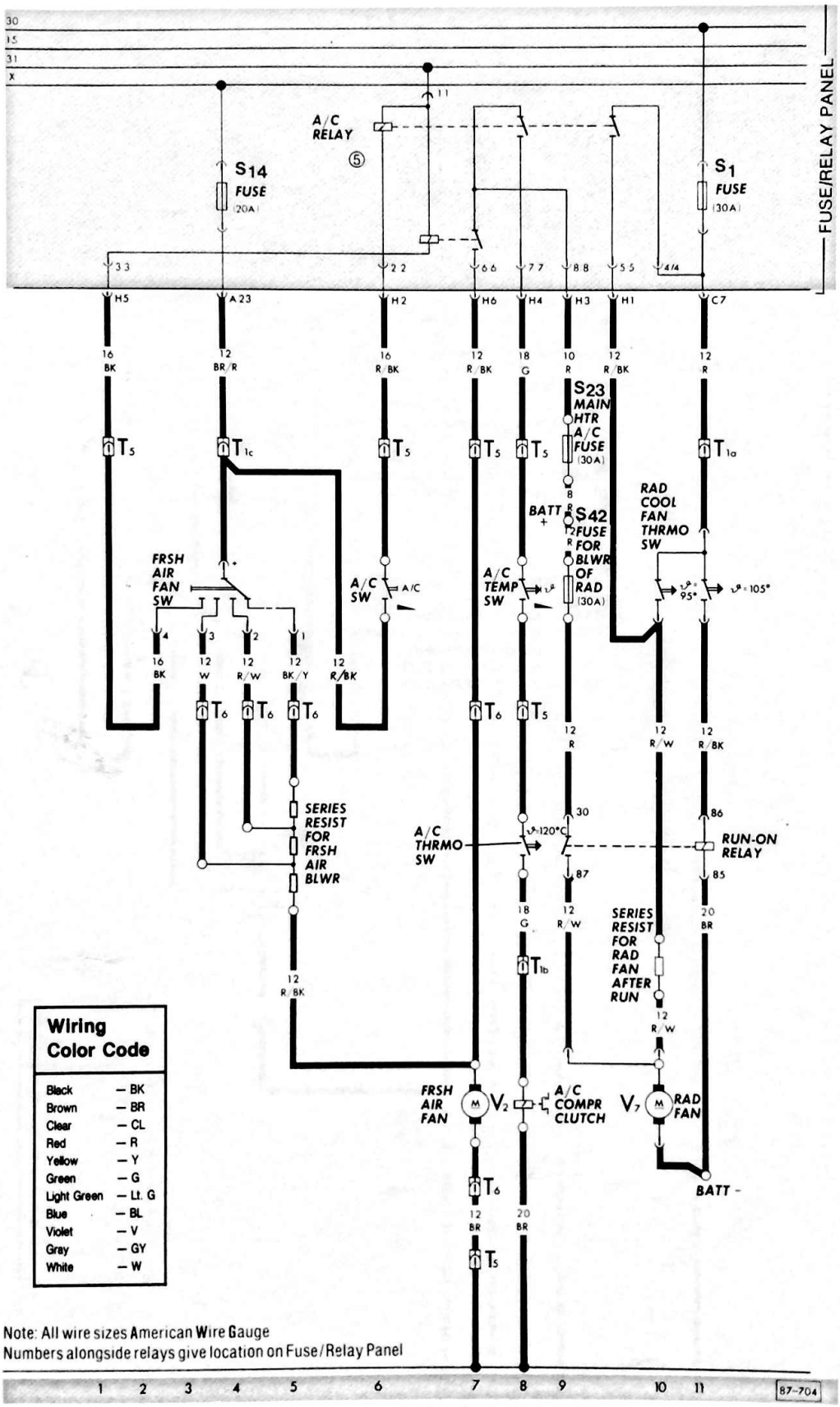
FUSE/RELAY PANEL
30
15
31
X
A/C RELAY
5
S14 FUSE (20A)
S1 FUSE (30A)
S23 MAIN HTR A/C FUSE (30A)
S42 FUSE FOR BLWR OF RAD (30A)
BATT +
BATT -
FRSH AIR FAN SW
A/C SW
A/C
A/C TEMP SW
RAD COOL FAN THRMO SW
95°
105°
SERIES RESIST FOR FRSH AIR BLWR
A/C THRMO SW
120°C
RUN-ON RELAY
SERIES RESIST FOR RAD FAN AFTER RUN
FRSH AIR FAN
A/C COMPR CLUTCH
RAD FAN
Wiring Color Code
Black — BK
Brown — BR
Clear — CL
Red — R
Yellow — Y
Green — G
Light Green — Lt. G
Blue — BL
Violet — V
Gray — GY
White — W
Note: All wire sizes American Wire Gauge
Numbers alongside relays give location on Fuse/Relay Panel
87-704

Oil Pressure Warning
1982 Jetta — CIS Diesel

Description	Current Track
Alternator warning light	7
C.A.T. warning light	13
C.A.T. elapsed mileage odometer*	14, 15
Coolant temperature gauge	10
Coolant temperature sending unit	16
Coolant temperature warning light (overheating red)	12
Digital clock	13
Engine oil pressure switch	17
Engine oil pressure control unit	4
Fuel gauge	9
Ignition/starter switch terminal	15
Headlight high-beam warning light	6
Oil pressure warning light	5
Upshift control light	2
Upshift indicator control unit terminal 1/W✓L	1, 2
Tachometer	3
Turn signal warning light	8
Voltage stabilizer	9

Wire Connectors

T1 — single, next to fuse/relay panel
T6 — six-point, on dash cluster
T14 — fourteen-point plug, on dash cluster

Ground Connectors

(10) — next to fuse/relay panel

(15) — in wire harness

(16) — wrapped tape, in wire harness

*For USA (49 states and California only)

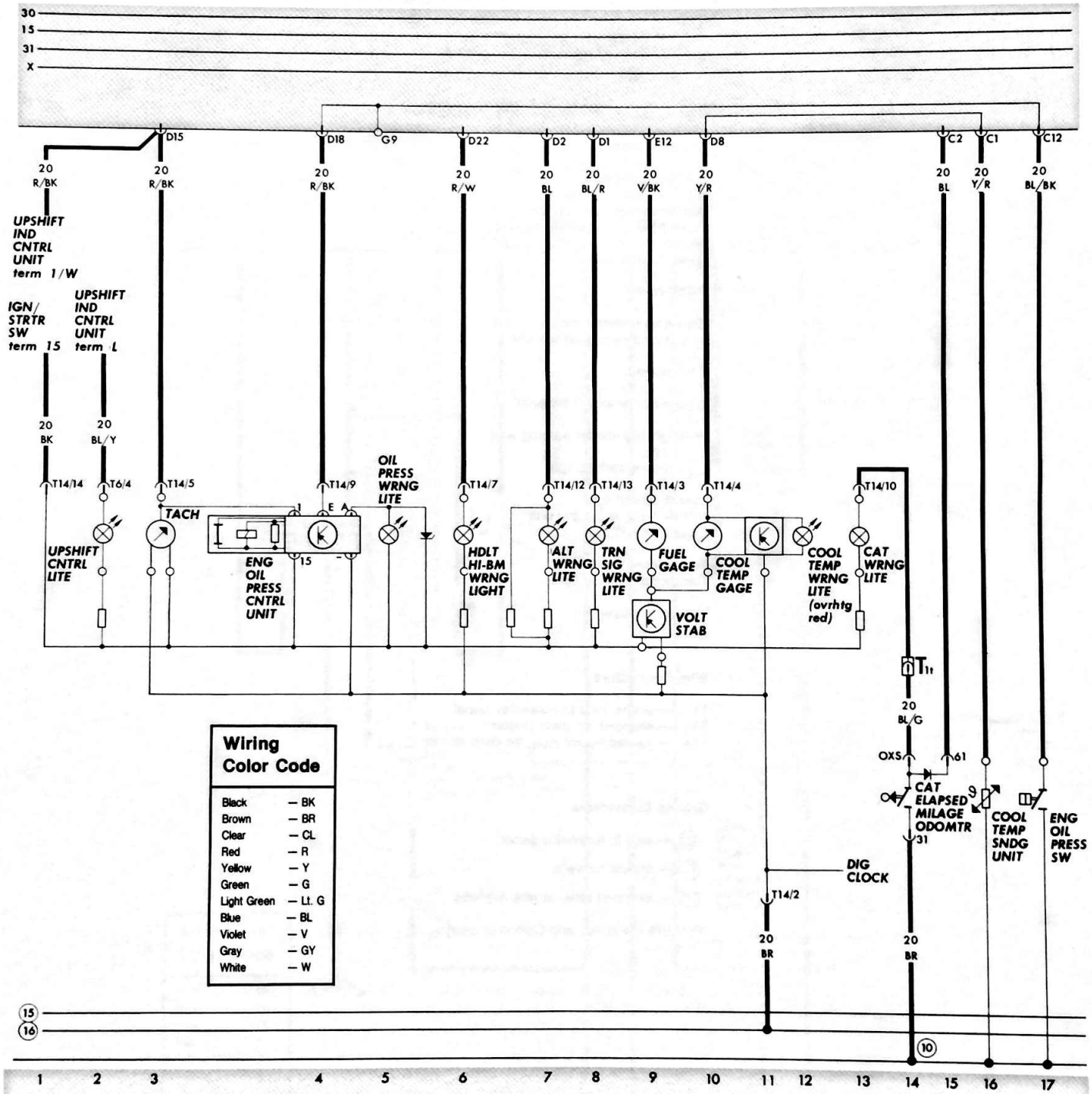

Wiring Color Code

Black	— BK
Brown	— BR
Clear	— CL
Red	— R
Yellow	— Y
Green	— G
Light Green	— Lt. G
Blue	— BL
Violet	— V
Gray	— GY
White	— W

Note: All wire sizes American Wire Gauge

1983 Jetta
Diesel/Turbo Diesel

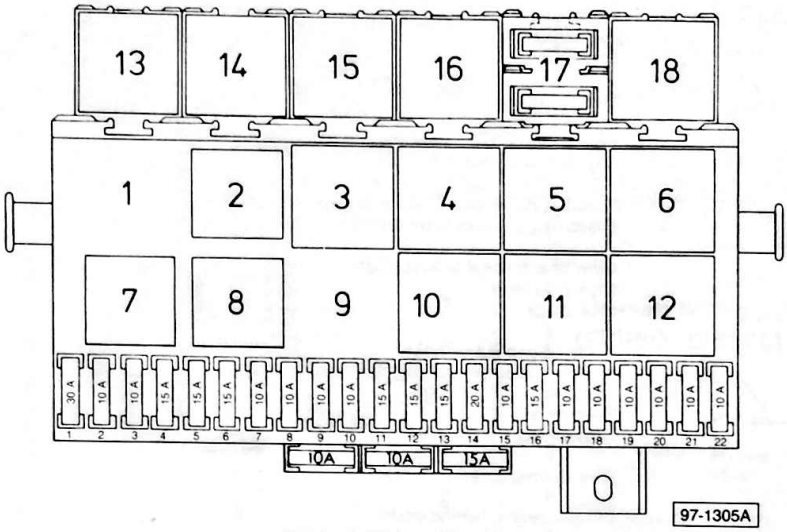

Fuse/Relay Panel

Relay Locations On Fuse/Relay Panel

1 — open position
2 — glow plug relay
3 — seat belt warning relay
4 — upshift relay
5 — open position
6 — dual horn relay
7 — open position
8 — load reduction relay
9 — open position
10 — intermittent wiper relay
11 — open position
12 — emergency flasher relay
13 — open position
14 — open position
15 — open position
16 — open position
17 — open position
18 — open position

Fuses

	Rating	Color
S_1	— 30A	green
S_5	— 15A	blue
S_{20}	— 50A	

NOTE

Circuits shown in these diagrams include only those components which are exclusive to the Diesel and Turbo-Diesel plus a few components common with the CIS cars where the electrical connections must be shown for clarification

Jetta, 1983
Diesel and Turbo Diesel

Description	Current Track
Alternator	1-4
Battery	6
Engine temperature sensor (pre-glow system)	13
Fuse S_{20} (Glow-plug fuse on fire wall)	
Fuses $S_{1,5}$ (on fuse/relay panel)	
Glow-plug preheat indicator light	22
Glow-plug relay	13, 14
Glow plugs	14, 15
Ignition-pump cut-off valve	12
Ignition/Starter switch	17-20
Radiator fan	10
Radiator fan thermoswitch	10

Wire connectors

T1 — single, behind dash
T1a — single, behind Fuse/Relay panel
T1b — single, next to battery + terminal
T1d — single, behind dash
T2 — double, in engine comp. (left)
T14 — 14-point, on instrument cluster

Ground connections

(1) — Ground strap — battery/body to transmission

(15) — Ground connection in wiring harness (front)

(16) — Ground connection tape wrapped in dash harness

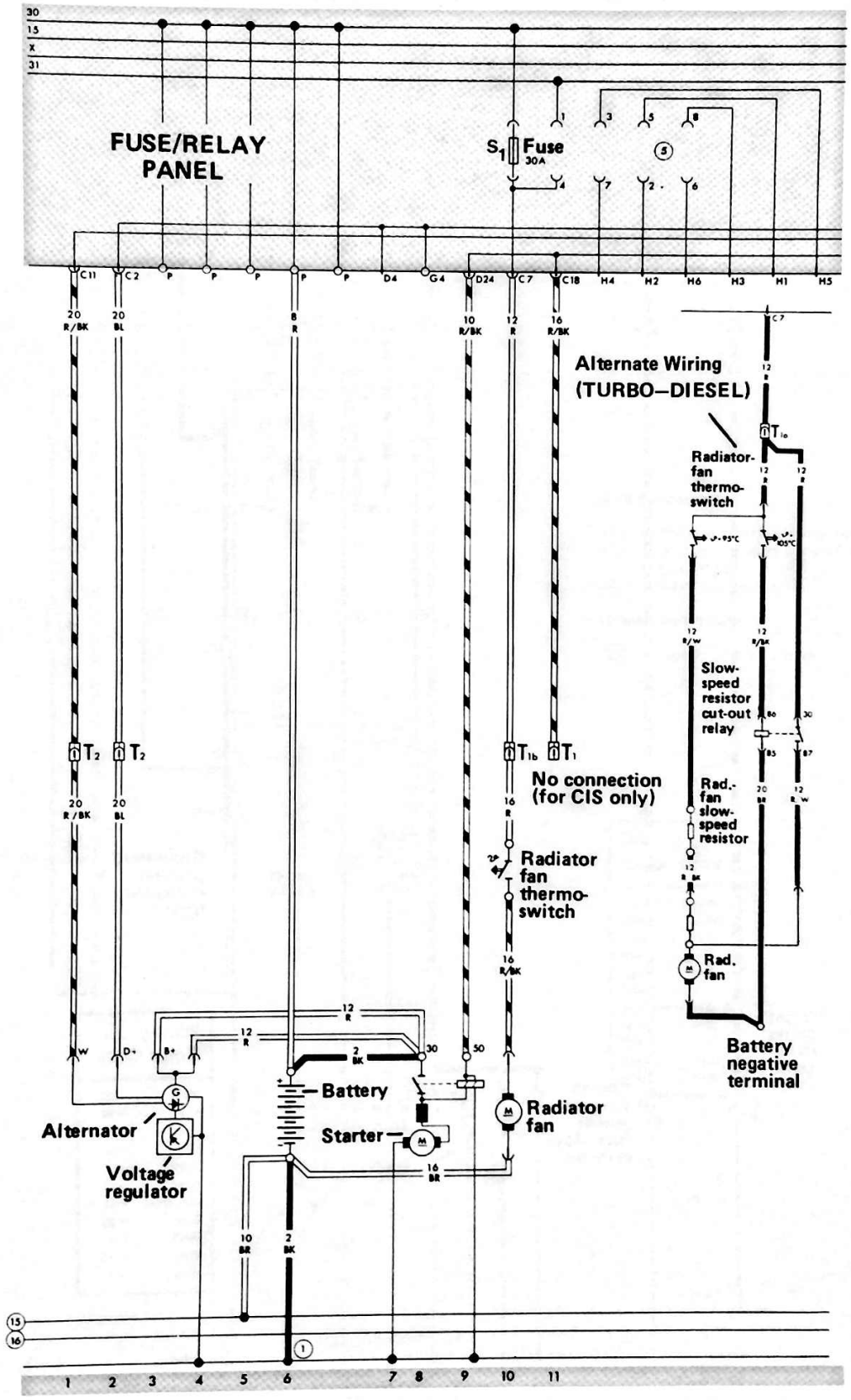
FUSE/RELAY PANEL
S1 Fuse 30A
Alternate Wiring (TURBO–DIESEL)
Radiator-fan thermo-switch
Slow-speed resistor cut-out relay
Rad.-fan slow-speed resistor
Rad. fan
Battery negative terminal
No connection (for CIS only)
Radiator fan thermo-switch
Radiator fan
Battery
Starter
Alternator
Voltage regulator

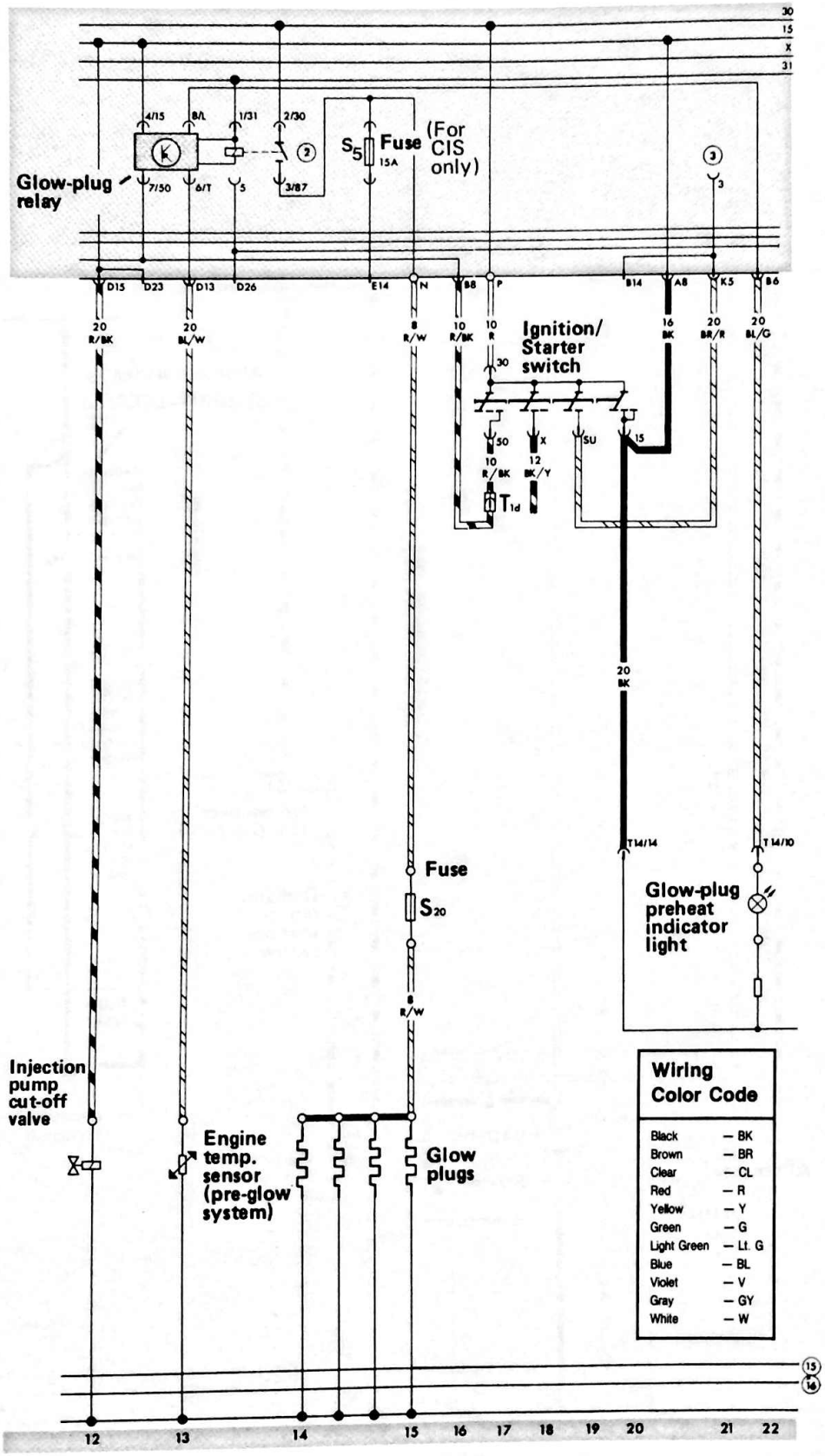
Glow-plug relay
S5 Fuse 15A (For CIS only)
Ignition/ Starter switch
Fuse
S20
Glow-plug preheat indicator light
Injection pump cut-off valve
Engine temp. sensor (pre-glow system)
Glow plugs
Wiring Color Code
Black — BK
Brown — BR
Clear — CL
Red — R
Yellow — Y
Green — G
Light Green — Lt. G
Blue — BL
Violet — V
Gray — GY
White — W

Jetta, Convertible — CIS
1982 Auto. Trans.

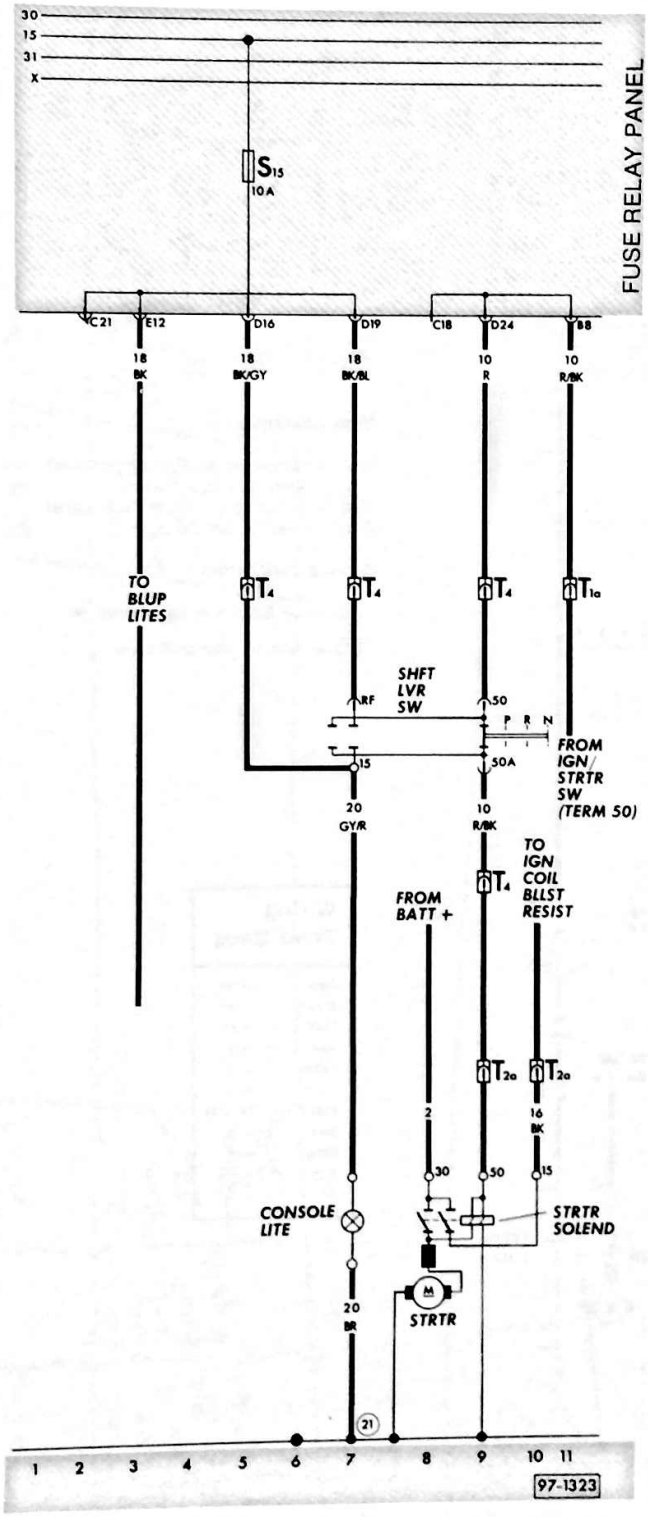

Wire connectors

T1a — single, behind fuse/relay panel
T2a — double, in engine compartment next to coolant hose
T4 — 4-point, behind dash

Ground connectors

(21) — next to gear-shift lever

Wiring Color Code

Black	— BK
Brown	— BR
Clear	— CL
Red	— R
Yellow	— Y
Green	— G
Light Green	— Lt. G
Blue	— BL
Violet	— V
Gray	— GY
White	— W

Jetta — Diesel
1983 Auto. Trans.

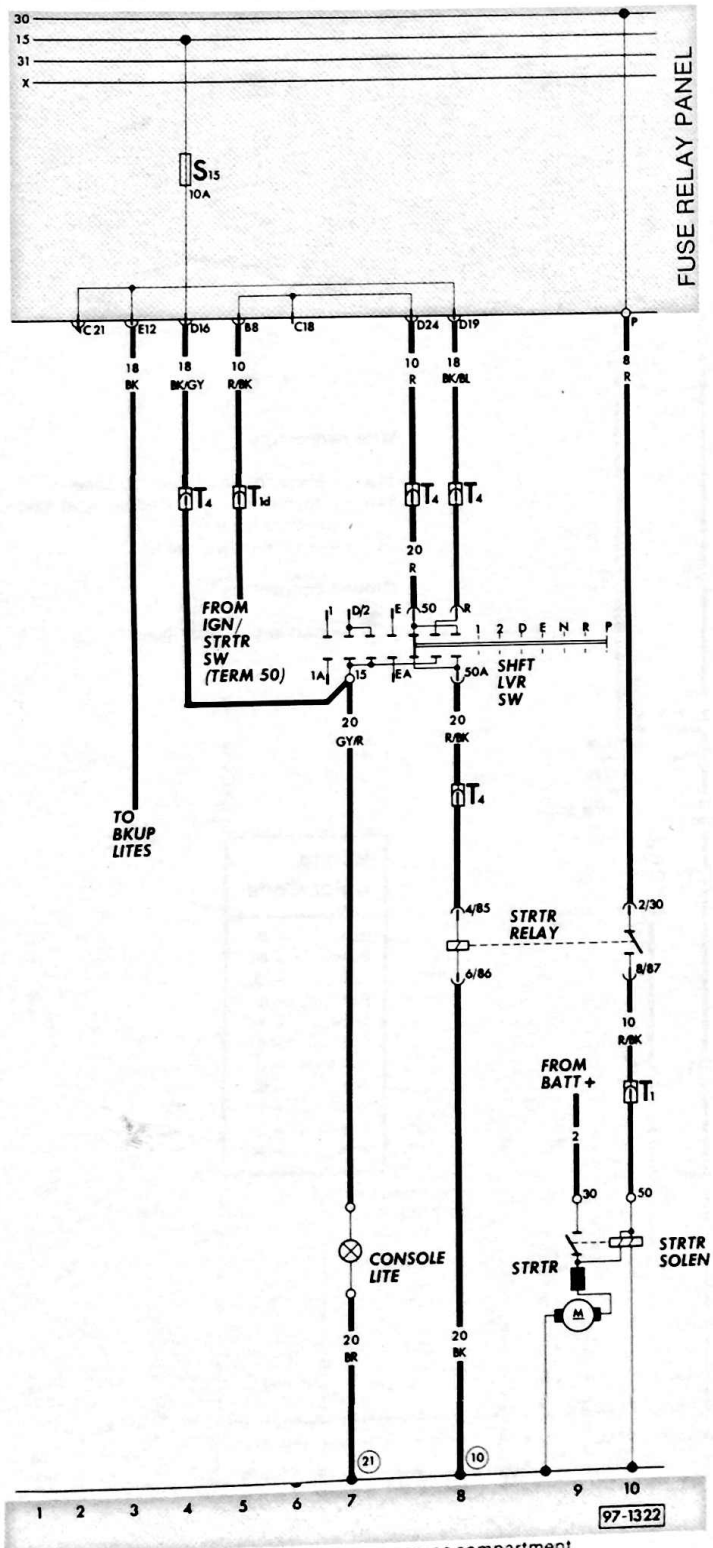

*Starter relay — next to glow-plug relay in engine compartment

Wire connectors

T1 — single, in engine compartment (next to coolant hose)
T1d — single, behind fuse/relay panel
T4 — 4-point, behind dash

Ground connectors

(10) — on fuse/relay bracket
(21) — next to gear shift lever

Wiring Color Code

Black	— BK
Brown	— BR
Clear	— CL
Red	— R
Yellow	— Y
Green	— G
Light Green	— Lt. G
Blue	— BL
Violet	— V
Gray	— GY
White	— W